Sussex County Technical School
Engineering Technology
ISR 11
Umptysquatch V Design Report
May 1, 2011

TABLE OF CONTENTS

EXECUTIVE SUMMARY **4**

INTRODUCTION **5**

OUR TEAM 5
OUR ORGANIZATION 7
PAST ISR INVOLVEMENT 7
UMPTYSQUATCH V PROJECT MISSION STATEMENT 8
ORIGIN OF THE UMPTYSQUATCH NAME 8

DESIGN PHILOSOPHY **10**

HULL 10
WINDOW PLACEMENT 11
GOPRO UNDERWATER VIDEO SYSTEM 12
FLEXIBLE HULL 12
PROPULSION 14
Tail 15
CF Design 15
CONTROL SYSTEM 16
SAFETY SYSTEM 17
Hatch 18
HUMAN ERGONOMICS 19
JACK 7.0 PROGRAM 19
Seat 20

FABRICATION **20**

HULL 20
FLEXIBLE HULL 21
PROPULSION 22
Rack and Pinions 22
Bearings 22
Pinion Shaft 22
Drive Arm 22
Handles 23
Tail 23
CONTROL SYSTEM 23
SAFETY SYSTEM 24
Seat 24
Buoy 24
HATCHES AND WINDOWS 24
GOPRO UNDERWATER VIDEO SYSTEM 25

SCUBA CERTIFICATION **25**

TESTING **26**

CONCLUSION **26**

PERSONAL REFLECTIONS **29**

BUDGET AND FINANCES 46
FIRST EVER PROJECT POEM 48

.....

List of Appendixes

Appendix A: Design Report Outline
Appendix B: Timeline
Appendix C: Photo Journal
Appendix D: Drawings/ Drafts
Appendix E: Team Info. / Copyright Forms

Executive Summary

The Umptysquatch V submarine is an unconventionally propelled human powered submarine. Umptysquatch V is propelled by a fish tail motion similar to that of the blue-fin tuna. The general dimensions of the submarine are as followed:

- Height - 34 inches
- Width – 33 inches
- Length – 152 inches

The Umptysquatch V team will work together in completing the following tasks:

- Designing a novel, oscillatory fin form of propulsion
- Incorporating both the upper and lower body in the drive system
- Increasing the accuracy of our control system
- Completing majority of our runs

Past Umptysquatch teams have previously designed four propeller driven submarines that set a high standard for submarine building for us. The previous teams built propeller driven submarines, however we have decided to take on a different route this year. Instead of a taking the conventional route, we have decided to base the design of our submarine based on the blue-fin tuna. We have performed research on the tail movements of the tuna and the shape to create what optimistically will be a fast, novel propulsion system for submarines. Based on our research, we are optimistic that this novel design will help us reach our goals.

Introduction

Our Team

The Umptysquatch V team consists of seventeen Sussex County Tech High School students, all of whom are enrolled in the engineering program. All seventeen team members have elected to join the team because of an interest in an engineering education as well as an interest in having the experience of creating and racing a human powered submarine. Our team is led by our project manager and classroom instructor, Mr. Christopher Land, who was previously an engineering officer in the United States Navy on a ballistic missile nuclear powered submarine.

In order to design and construct the Umptysquatch V, the class was divided into the following sub-teams who are responsible for the design of their part of the submarine:

Hull

- Dean Romanelli

Flexible Hull

- Tara Mahady
- Jackie McFarland

Propulsion

- Tyler Gurski
- Travis Lawrence
- Luke Magera
- John McDougall
- Justin Gurry
- Joe Westley

- Chris Snook

Control System

- Brian Dubord
- Dennis Rupp
- Tyler Gurski
- Soleil Schatteman
- Mike D'Alessio

Safety System

- Christopher Bell
- Mike Carano
- Travis Lawrence
- Nick Saverese

Human Ergonomics

- Soleil Schatteman

Our Organization

The Sussex County Technical School Engineering Technology course is a hands-on engineering learning environment. The course is an integration of physics, mechanical design, and manufacturing experiences intended to give a student a real vision of what it would be like to have a future career of engineering.

Every day the students in the engineering program start out with a calculus-based physics course that counts for college credit at the New Jersey Institute of Technology. In this course mechanics, thermodynamics, electricity and magnetism are studied to give a strong physics background to allow students to design both small and large projects.

After the physics portion of the Engineering Program, students start working on various projects for experience in different programs and machining types. Freshman year students learn to use Siemens NX Design, which is a computer aided modeling program used for designing parts, simulating parts, and sometimes machining programs of the parts. Then sophomore year the students learn how to use FeatureCam, a computer aided manufacturing program, that they use to machine various parts for different projects. Junior and senior year the collective knowledge from the previous two years is used to design and create a large group project sucha as a submarine for the ISR program.

Past ISR Involvement

Sussex County Technical School has previously participated in the past four International Submarine Races. Of these past races, Sussex Tech has brought home two first place wins for the design report awards, received third in fastest speed for two person propeller driven submarine, best use of composites and third place for overall performance. In addition we have won first place for innovation. This year we have worked hard and hope to receive additional awards for

this submarine, keeping our standards of work high for the next generation of engineering students at Tech.

UmptySquatch V Project Mission Statement

UMPTYSQUATCH-5

(One Person, Non-Propeller Driven, Human Powered Submarine to be raced at the 11th International Submarine Race, June 2011)

MISSION STATEMENT

Our objective in Umptysquatch - 5: is to design and fabricate an oscillatory hydrofoil propulsion system with a hydrodynamic hull based on the motion and the structure of the *Thunnus Thynnus* (aka Bluefin Tuna). We also wish to achieve a minimum speed of 4.20 knots and complete a minimum 1/3 of all runs attempted.

Sussex Tech Engineering Project Started: September 24, 2010

Origin of the Umptysquatch Name

The story of the origin of the Umptysquatch Name is simple. Here it is. Back in 2002 during our initial design work on Umptysquatch 1, the time came where we had to fill out the Team Registration Form for ISR-7. I can tell you that at that time we had our hands full! We had no money, no scuba training, no sponsors, and most importantly, no experience in designing and

manufacturing human powered submarines. As the Project Manager, I called a project meeting and announced that the Team Registration Form required us to have a name for the submarine. I informed the group that I did not want this to take more than 5 minutes as we had much more pressing issues to address. Michael Bruens informed me that they had already picked a name. "Great" I said…what is it. "We want to name the submarine "Umptysquatch". My exact words at that time, and I remember them verbatim were: "Over my dead body will we name this submarine Umptysquatch." Michael Bruens immediate response was: "OK Mr. Land, then we're not racing it." I then said "OK the name is Umptysquatch." The students got the name from me originally. When I was in the Navy, we used to refer to things that we didn't know the name of as an "umptysquatch", like a "thingamajig". I used to use this term in my lectures, and they all thought it was funny. As it turns out, it was probably the best name that we could have come up with, because the press picked up on it and covered our story all over the country. During our performance at ISR-7 the Diving Supervisor refused to refer to us as Umptysquatch. As I recall, he preferred the following monikers:

"Umptyscratch"

"Humptysquash"

"Alwayscrash"

"Sasquatch"

We learned to love the ridicule, and the name has stuck ever since.

Design Philosophy

Hull

Our choice of a fish replicated motion changed our design of the hull from previous years. This year in order to create our fish-like motion, the front two-thirds of the submarine will be rigid while the back one-third will be flexible. To make the shape for both flexible and rigid halves of the submarine we used a modified shape modeled from a blue fin tuna. A cross sectional area was taken from a blue fin tuna to in order to make a model of the tuna's body to start with. After the cross sectional area of the blue fin tuna was made, different points were extracted from this to make a model in our CADD program Siemens NX (NX).

In NX, the model of the tuna was made from the defining points of the desired tuna hydrofoil shape and then manipulated them to make our submarine shape fit a human being. The tuna shape was widened using an elliptical shape just large enough to fit our driver. Each driver was measured to make sure that there was enough room for them to fit in a recumbent sitting position. After creating the hull 3D model in NX, we then took it to our rapid prototype machine and created a model of the submarine for scale testing. With some scaled testing, our team then decided our tuna based hull was exactly what we needed and then began designing the additional necessary systems that needed to be installed in the hull. Below are pictures of the 3D print of the hull and the 3D NX models of the hull:

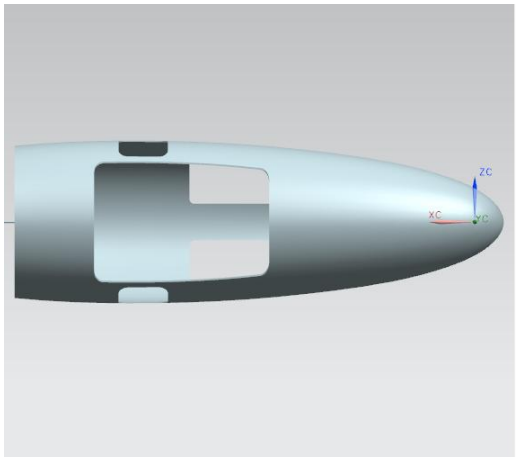

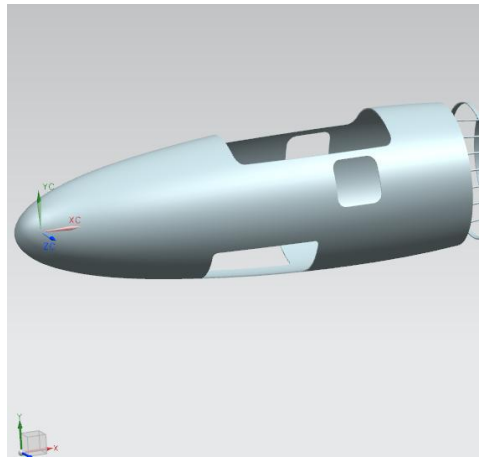

Window Placement

The decision to place our driver in a recumbent position narrowed our options for window placements. As a result, a scenario developed in which our visibility out of the submarine was low if not nonexistent. To rectify this issue we utilized the eye view capabilities of the Jack 7.0 software (human modeling software used by auto manufacturers) and based our window placements accordingly. Based on the results from the optimal placement of the windows, we deduced that the use of underwater cinematography would be ideal for our driver's sight lines. Below is a view from the Jack 7.0 software of what the driver sees out the windows and of the placement of the windows on submarine:

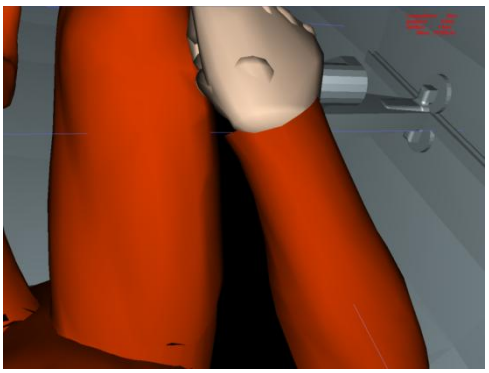

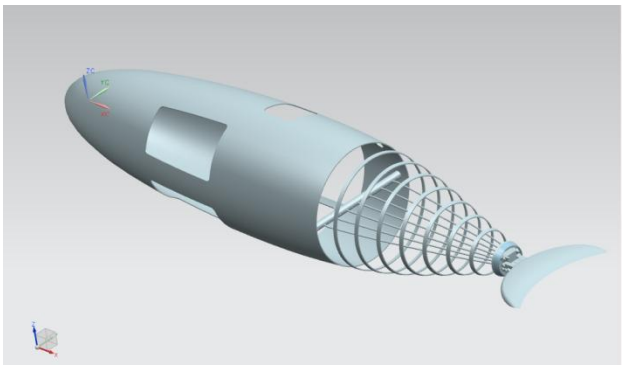

GoPro Underwater Video System

As is with every submarine, it is very important to be able to navigate freely through the water knowing your surroundings. From the start of Umptysquatch 5, as a whole team, we identified visibility in the front of our submarine could be marginal due to many systems mounted in the front of the submarine. The Idea of an assist in the form of a camera system was then was elaborated on. The proposed system will consist of 1 GoPro camera, mated to a 7-inch monitor constantly feeding live video, and recording simultaneously. This will allow for runs to be monitored, and played back on demand, which will enable a seamless diagnostic of every run made. Specific requirements of this system are:

- Waterproof
- Removable
- Compact
- Placed out of contact with any other systems

Also, we realized that the system needed to have the best battery life possible, with easy access to any power source.

Flexible Hull

The design for Umptysquatch V is based on the movement of the blue-fin tuna. This year, it was necessary to think of an idea of how to mimic the canting motion of the back third of our submarine. After performing an immense amount of research on the motions of the tuna, it was discovered that the back third portion of our submarine would need to to be able to flex. We based many of our design decisions on our lengthy discussions with Dr. Frank Fish of West Chester University. Dr. Fish is a world renowned expert on the Humpback Whale, and a specialist in the area of biomechanics of aquatic species.

The back third of the submarine has been determined to be flexable, so an idea for making it this way was proposed. A neoprene skin with ribs to create the shape was proposed to make the tail flexible and to keep the hydrodynamic shape of our submarine's hull. The ribs were spaced out based on the 45 degree cant angle of the motion of the tail. Each rib was seperated with enough room to allow for the full design flex the tail without interfering with another rib. Each rib will be held in place by being attached to the neoprene skin and the neoprene will be attached to a recessed flange on the aft end of the fiberglass hull. Pictured below is a model of the spaced out ribs without a neoprene covering:

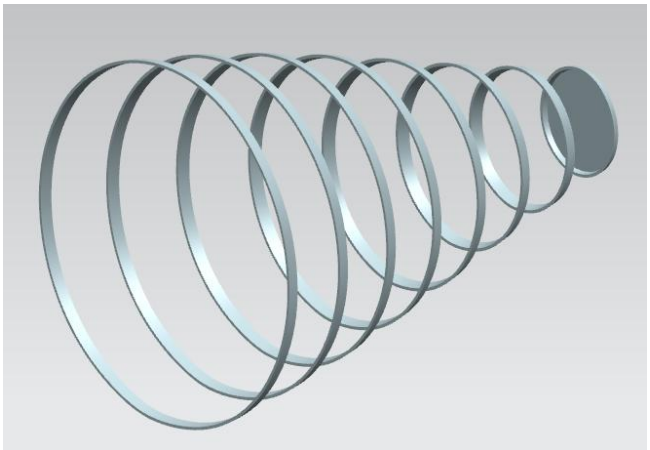

Propulsion

The actuated drive system itself is based upon linear motion produced from both the upper and lower extremities of the body. The linear motion is transformed into rotational motion through a horizontal rack and pinion assembly. The vertical pinion shaft, mounted top and bottom to the hull, also supports a sprocket. This sprocket is responsible for actuating a chain which runs the length of the sub to another sprocket at the base of the flexible tail. The transfer of linear motion to rotational motion is hard-geared (i.e. rack and pinion) so the pinion shaft and sprocket rotate a certain degree one direction, reverses, and then continues the same degree in the other direction. This produces the necessary oscillatory motion required to reproduce the desired fish-like motion. Pictured below is the image of the drive system:

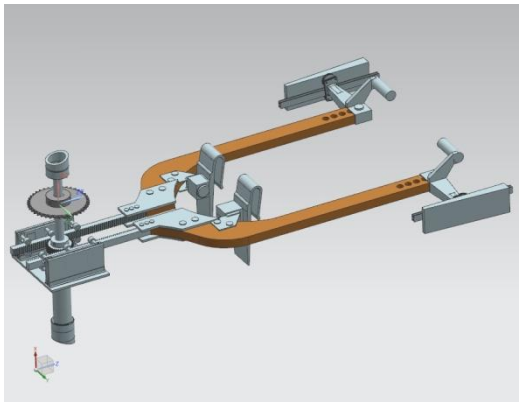

The points of contact between the human operator's hands and feet are hard-linked by a long solid arm, to support the pilot's recumbent position. The non-flexible connection forces the pilot's arms and legs to operate in unison and eliminates any chance of binding. The ends of this arm where the operator makes contact with his hands are supported on the side of the hull via a rail and roller system. The pinion shaft and associated pinion are mounted between the two racks which, at this point, make contact with the pinion in order to rotate the pinion shaft and therefore drive the sprocket. The two racks are held in constant contact with the pinion through a three sided boxed assembly containing rollers limiting any movement in the horizontal or vertical direction.

Tail

The tail was designed based on the blue fin tuna tail. It was scaled to fit our submarine so it would have enough thrust to push the submarine forward. The thickness of the tail was scaled up to so that it would be strong enough to hold up to the amount of force on the tail. The tail design is essentially a scaled up tail of a blue fin tuna, which will be partially flexable like a blue fin tuna.

CF Design

CF Design is an advanced computational fluid dynamic (CFD) fluid analysis program in which we used it to find the correct cant of our tail that would produce the most thrust. Countless variations of the angle were tried to see how much thrust was produced ranging from angles as small as 25 degrees to angles as large as 45 degrees. In our fluid analysis runs we found 45 degrees to be the best thrust for our tail. That being the case, we calculated that in order to produce the necessary thrust to propel our sub to 4.2 knots, our tail needs to move at a speed of 1.6 m/s (transversely) giving us about 30 pounds of thrust. Pictured below is a graph of propulsion thrust versus cant angle as well as a picture of the accompanying fluid flow analysis:

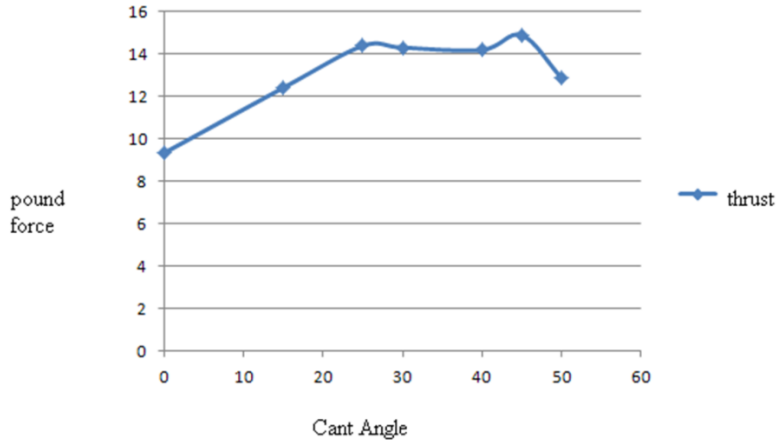

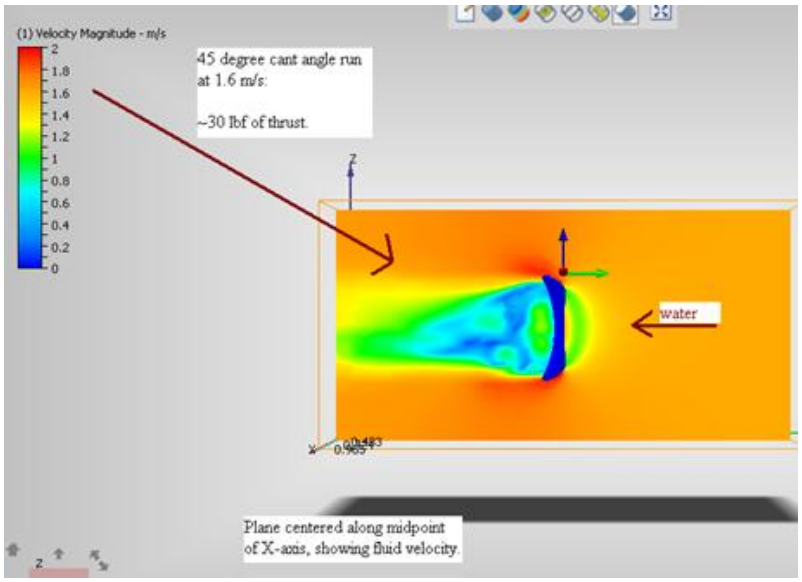

Control System

The design of the control system has always been an important part of the submarine as a whole that we have often overlooked, under designed, or not properly managed. This year with the implementation of a non-propeller type arm-and-leg drive system the need for a sturdy, easy-to-use and effective control system was clear.

The first problem we faced was the transformation of linear movement to rotation around a fixed axis. Finding a system that converted movement in the X to movement in the X and Y simultaneously proved to be challenging, but after a few overcomplicated and ineffective drafts we finally came to the conclusion of using a rigid connect on both the actuator-to-system and fin-to-system connects and connecting these system parts using an elbow joint of sorts. This allowed for movement in the Y as a function of X displacement.

Keeping the system in a neutral (not diving or rising) position when not in use was also an important factor; the simplest method being the use of springs. After being actuated in either direction, whichever spring was compressed would of course have a restoring force which would in turn restore neutrality to the system. Making this system adjustable was accomplished by

allowing for each spring's compression to be adjustable. The combination of ease in actuation along with the self-restoring neutrality of the system has led us to believe this system will serve its purpose fully, easily, and without failure. Pictured below is an image of the control system.

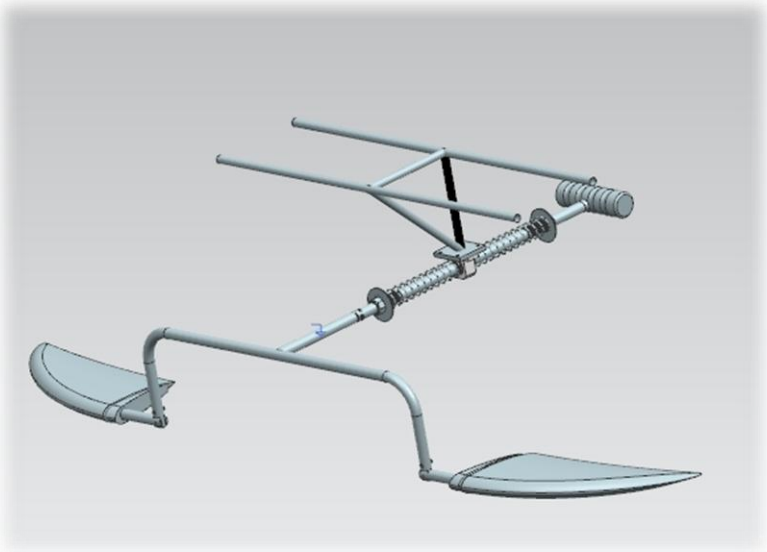

Safety System

The Umptysquatch V's safety system this year has become revolutionary compared to previous ones. Previously the safety system involved using the hands for the release of the "Dead Man's Switch," however this year it was decided that instead of a system that involves the hands to set off the "Dead Man's Switch" the seat itself would become the switch. The old method, having worked in the past is too tedious and complex for this submarine.

With the use of the seat as the "Dead Man's Switch" the way of triggering it has changed. The seat releases the "Dead Man's Switch" when the pilot become unconscious. When the pilot becomes unconscious, the seat will move forward, moving a lever that pinches a

line that keeps the buoy in place. Pre-spooled line on a baitcasting fishing reel will then pay out as the buoy floats to the top without complications.

Hatch

In previous years the hatch has been something quick and just added in as part of the safety system. This year the hatch has taken more time and thought because of the change in the seating position of the driver. This year the hatch has been made larger for easier entry and exit of the submarine. This was required since the driver is now sitting in an upright recumbent position.

The hatch this year also has some new enhanced features other than size. A window was added to the top of the hatch for the driver to be able to look out the top for convenience. The hatch was also specially positioned for the easy reach using the human simulation design program Jack 7.0 by Siemens. This program is used extensively by auto manufacturers for the placement of controls and ergonomic feature design. The program is able to show us the best position to place the hatch and the simple door sliding lock for accessibility of the driver. Pictured below is a model of the driver reaching for the hatch's latch and the hatch:

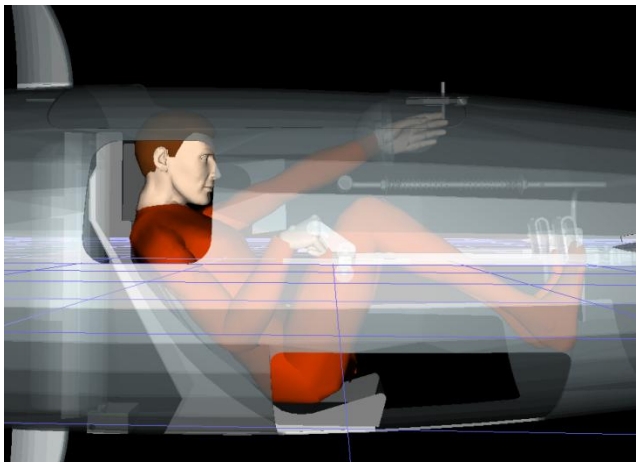

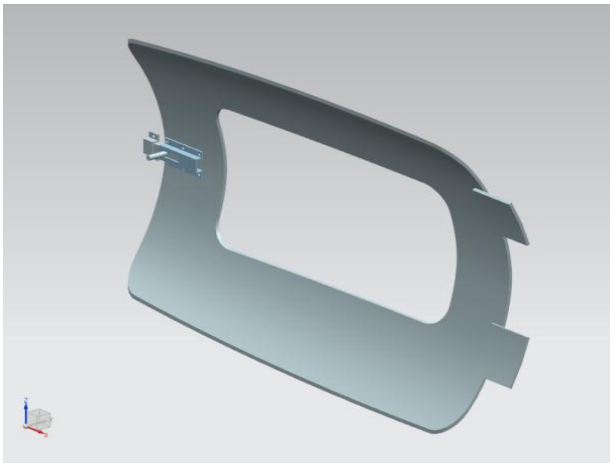

Human Ergonomics

This year thanks to the addition of the Jack human modeling software, ergonomics has become part of our design. The driver's reach, comfort, visibility were all taken into account this year in the design.

Jack 7.0 Program

We utilized the Jack 7.0 software program extensively throughout our design process to ensure optimal human efficiency and ergonomics. The software enabled us to place ourselves into our submarine and adjust our design accordingly. We were able to understand human constraints within the submarine. Also the Jack software program allowed us to see through the eyes of our human model and design windows for an ideal field of vision. The information we gathered from operating Jack 7.0, empowered us to make vital design decisions. Pictured below is an image of the driver simulated inside the submarine using Jack 7.0:

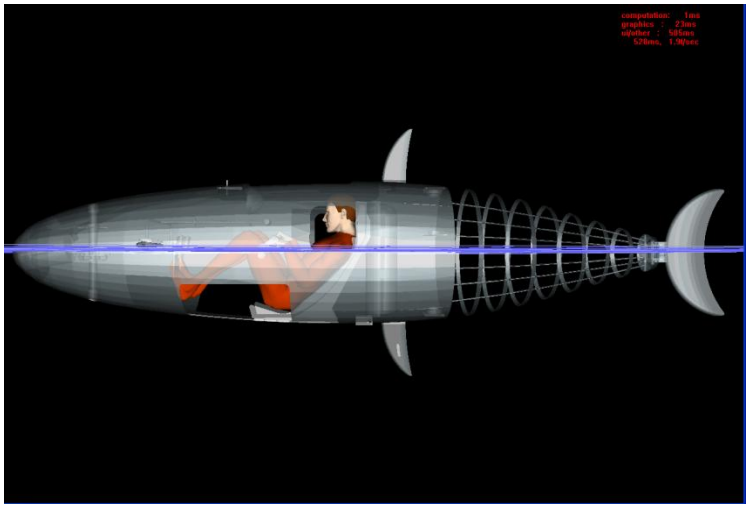

Seat

In Umptysquatch 5, the recumbent propulsion design called for a seat unlike our last submarine. This seat also needed to be tied into the dead man's buoy system because there is a lack of stationary surfaces within the submarine due to the use of both arms and legs in propulsion. The only stationary object the pilot would be in contact with is the seat itself. Our design called for a spring-loaded seat back that requires constant pressure from the pilot. In the event of any emergency, the seat will fold forward releasing the buoy signaling for help.

The seat was designed using Jack 7.0 and Siemens NX, to allow for pilot comfort while minimizing costs to the project. Seats can easily be bought for such a project however the price was higher than we could afford, (i.e. $400 per seat. Our seat was designed and positioned for the comfort of the driver and the ability to reach various objects in the submarine. The following image shows the Umptysquatch V seat design:

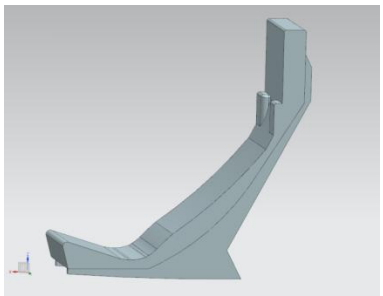

Fabrication

Hull

The solid hull was made by creating a drawing of the hull in sections; the hull was separated into 10 separate sections. We then cut those out of wood and aligned them on a sheet of plywood to create a frame of the inside of the sub. Next we filled in the gaps with foam

blocks and glued them down to make a full mold. After that we sawed and sanded the blocks down till they fit the contours of the frame thus making a full mold, any defects in the foam were fixed with body filler. We then sprayed the entire mold with a buildup primer, filled the dips with filler, and sanded it to a smooth finish to create a smooth inside.

Flexible Hull

The flexible hull will be made using a neoprene "skin" to allow for flex. The flexible part of the hull is made using a tool called Fabric Pattern Template in Siemens NX, this takes the back portion of the hull and flattens it out to create a fabric pattern of the back two-thirds of the submarine. The pattern will be cut out of neoprene and sewn together to keep the hydrodynamic shape of the hull. Ribs will be made and inserted in the neoprene pattern so the back holds its shape. Pictured below is a scaled image of the fabric pattern for the neoprene hull:

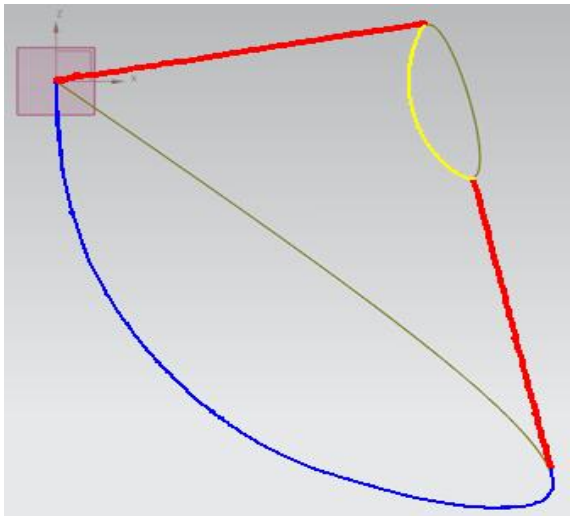

The ribs that are going into the neoprene patter will be made out of fiberglass and plastic tubing. The plastic tubing will be cut and shaped to the size of the submarine's ribs and then it will be filled with buoyant foam. Then the tubing will be covered in a fiberglass sheath that fits almost exactly to the plastic tubing and then covered in fiberglass resin. This method of fiber

glassing is a new method to us as we have never used fiberglass sheathing before, however we are confident in this method of construction.

Propulsion

Rack and Pinions

The rack and pinions were made in similar fashion using the automated manufacturing capabilities of our shop; Feature Cam coupled with CNC machining. The racks and pinion gears were machined by us in our CNC Mill. The sprockets and chain were purchased commercially.

Bearings

The bearings which secure the racks are machined from plastic stock. The bearings themselves are bolts that have a hex nut placed on the end opposite of the bolt head. The nut will be sandwiched between two plates, which in turn are bolted together. This assembly, known as the rack bearing housing, is then mounted and bolted to a plate that is secured on a sleeve that encloses the main shaft of this system.

Pinion Shaft

The pinion shaft is a solid 1 inch aluminum shaft that is bookended by bearings. The bearings are pressed into plates that attach to fiberglass reinforced wooden mounts on the subs hull using screws. The pinion and drive sprocket are hard mounted to this shaft, ensuring their degrees of freedom are limited to those of the shaft itself. A sleeve is mounted to the bottom bearing, with the sole purpose of giving a secure mount for the aforementioned rack bearing housing.

Drive Arm

The Drive Arm is to be made of fiber glass reinforced wood. It will be attached to the racks by having two separate aluminum plates sandwich the drive arm and rack. The plates are bolted together, in turn completely securing the drive arms and racks together. The pedals are

existing pedals from a previous sub that are to be mounted to the drive arm by a plate that is bolted to it.

Handles

The handles are raised off a sleeve that encloses the drive arm. This sleeve is bolted to the drive arm and is depicted in the picture features the ability to be adjusted to the drivers liking. An arm extends off the handle sleeve to set of bearings mounted top/bottom on said arm. These bearings run along a double sided sleeve. This sleeve is mounted directly to fiber glassed wood, similar to the pinion shaft, on the sub's side walls.

Tail

Once we obtained the designs for the two tails finished and had established a plan on how to make them, we began to work. We are making two different hydrofoil tails, one the shape of a tuna's tail (swept forked hydrofoil) and the other a rectangular (straight hydrofoil) shape. To do this, carpentry made us four plywood cores (two of each design) and cut out foam for us. Then, we measured the foam and glued it to the wood using a mixture of micro beads and, fiberglass resin. Once dry, we sanded the foam to meet our specified dimensions. Next, the tails were covered in fiberglass for strength and then covered in the micro bead mixture. Finally, we smoothed down the hardened mixture with a sander. Once we are done sanding the two tails they will be painted to match the sub.

Control System

To begin the manufacturing process, we decided to first create the side fins. The best method to make these parts is a molding process which involves laying a foam core in a two plate mold and shaping the actual fin around it by pouring micro-bubble resin into the mold with the foam already in it. To secure the fin to the system itself, an aluminum rod is inserted into the

mold after the micro-bubble resin has been poured in. The molds were designed and machined in-house by us using our CNC machining capabilities.

Safety System

Seat

We started the manufacture of the seat by having our carpentry shop cut us plywood sheets which provided a stable base to mount the rest of the seat to, as well as a surface to adhere the foam to structure with the adhesive. We then glued foam to the wooden frame and sculpted it to curve around the driver's back. The seat started very flat and high allowing for no support of the pilot's back, shoulders, and neck. Through pilot feedback, and sanding done constantly, the seat shape was completed in about one week.

Body filler was applied to the seat, as a way to cover any imperfections and raise any spots that needed to become higher. This entailed a small amount of experimentation with regard to application of the body filler, sanding techniques, and the amount of hardener in each batch of body filler. Progress for the first week was slow, but by the second week we had the process set in stone.

Buoy

A hole will be cut out of the hull, which will become the top section of the buoy. It will be created the same way as was done with Umptysquatch IV, where we attach a small block of foam that will be shaped, as part as the holder for the string. It will then be covered with fiberglass to ensure the buoy will stay in position. The buoy will be spring loaded into the hull to keep it held close to the sub's outer hull for ultimate hydrodymics.

Hatches and Windows

The hatch will be made after putting the two halves of the submarine's hull together. Once the two hull halves are connected, the hatch will be cut out from the hull to ensure a good

fit. The hatch window will have a place cut for it and the actual window will be made from lexan that is molded in a couple large ovens (our school's bake shop pizza ovens) so that they fit the shape of the hull. All of the parts to the hatch's latch will be machined and installed into the hatch and hull as required.

GoPro Underwater Video System

We have received a camera donated from GoPro with various mounts supplied. This GoPro camera is waterproof to 60 meters, well beyond the depth of the supplied test facility. We will be able to stream HD video, while simultaneously recording in full 1080p Resolution. This will allow for us to review each of our runs after the day ends. The camera is a superior tool allowing us to use technology we never had in previous subs. We will have to adjust the case in order to allow live streaming, and maintain the waterproof capability.

SCUBA Certification

For the ISR 11 students in our shop volunteered to become SCUBA certified divers. Obtaining the SCUBA certification enables us to pilot, maintain operational performance while underwater and is required of all teams wishing to compete in the race. This year we had six students become SCUBA certified along with our instructor who was previously certified. Those students that are piloting Umptysquatch V are as follows: Soleil Schatteman, Brian Dubord, and Michael D'Alessio. Our supporting divers will include: Dennis Rupp, Dean Romanelli, Tyler Gurski, Mr. Andre Savard and Mr. Land.

Testing

Before we set off to the races with our submarine we will test the submarine primarily for proper neutral buoyancy, and proper ingress/egress operations for the pilots. We will also be checking the fit of exterior parts, and a test of the center of gravity. Once all the systems have been checked and are working, we will practice steering and driving the submarine for additional practice before the races. We should mention that testing of our submarine has been made more challenging this year as due to the tough economic times we find ourselves in, our school has drained our pool due to inadequate finances to continue its operation.

Conclusion

After over a year of hard work, planning, research, design, and manufacturing, we have met our one of our initial project objectives; we have successfully designed and manufactured a Human Powered Submarine to race in the 11th International Submarine Races. During this experience, we were aware of what difficulties we would encounter, but even from the start, the rewards far outweighed the difficulties. Although our shop class had competed in the past four International Submarine Races, it was not our work that went into those races. This race is ours. Each one of us can look at our submarine knowing full well that it could not have been completed without our hearts, minds, and hands. A tremendous amount was learned before the completion of this project. Specifically, during this project we have gained invaluable experience in the following areas:

- Group working skills: This project has forced us to learn to work together as a team in organizing and completing complex tasks. We have learned that dividing the work between team members on a large project is a major key to success.

Also, each student must be just as driven as the rest to want to complete the project.

- The process of modern boat manufacturing: Our team has gained knowledge of the modern boat manufacturing process while completing the full design and manufacture of a fiberglass hull of our submarine. We have endured much hard work in order to manufacture the hull to our needed standard. Despite the creation of the submarine in previous years, we got to experience first hand the amount of work required to build a traditional fiberglass hull and how overwhelming it can be.
- CNC machining: The process of automated manufacturing (i.e. CNC machining) various parts (i.e. racks, pinions, fin molds, etc) has taught us the true benefits of this technology and its limits.
- Budgeting: From our budget it is evident that we have succeeded in managing our overall costs. We have learned that public sector involvement is a key part in a major project. We have had the luxury of obtaining most of the materials needed through donation at no cost. Mainly, though, we have learned that donation of materials is much more available then the donation of services.
- The use of pre-engineered systems vs. original designs: After much design work, many of our best ideas have come from pre-engineered parts, with our own modifications. We have learned to always check for existing technology prior to starting a major design effort.
- Scheduling: Having a flexible schedule with non-negotiable milestone dates is a key part to completing a large multi stage project.

In retrospect, this project has been an extremely rewarding experience in all of our lives. Everything about this project, from the smallest detail to the largest manufactured part represented a true engineering design/build challenge. There were no "How to Build a Human Powered Submarine" reference books. Despite our previous submarine involvement, all our questions did not have straight answers from the experience. We simply used our solid academic and hands-on skills and applied them to a truly monumental challenge. Our submarine succeeded because that's what we worked towards.

As we have learned in the past, it is the Design of the submarine that is the most important. A good design that takes into account a team's manufacturing strengths and weaknesses can be prototyped/manufactured successfully with relative confidence. It does a team no good to jump into the manufacturing stage early and hope that things work. This submarine has been the most complex project ever attempted by the Engineering Technology Program at Sussex County Technical School. Although at the writing of this Design Report, we are not at the testing phase of the project, we are confident that our systems will work as designed, and that we will have success at the 11th ISR. We have taken the most design risks of any Umptysquatch team. We are excited to bring our creation to life at the 11th ISR. In a few weeks we will put our machine in the water for the first time, and will then proudly announce to the world that:

"UMPTYSQUATCH 5…..IS ALIVE"

We thank the Foundation for Underwater Research and Education for hosting such a unique and challenging competition. We also thank the Sussex County Technical School Board of Education for supporting our effort to compete.

Personal Reflections

Chris Bell

The International Submarine Races has been a lot of hard work and determination for every student in this project. We as a team have outdone ourselves in the amount of work that we have completed, and will complete, to ensure that we have the most interesting submarine that Sussex County Technical School Engineering Program has ever made.

I found this experience stressful at times, and required me to think in different ways to help get this system to work in the submarine. I continued to push through and found that the end will justify the long trail that it took to get to where we are. The task of working with a team to build a submarine is no easy feat. I feel that this helped me to understand the varying skills that we learned over the previous years in the Engineering Program, and put them to the test to create the submarine. If I could do it over, I would definitely do it again.

As of now, I have not narrowed down which college I would like to go to. There are so many opportunities for me and career choices still out there. I did not rule out Engineering as a possibility for me.

Mike Carano

The ISR competition has given the best educational experience that any school could provide for real world experience. We gained problem solving skills that are vital in careers as we innovated and designed on a real working project. The problems were as close as they could be to real, had real consequences, and everyone in our class had to work with each other in order to finish successfully. This was an unforgettable experience that will follow and help us for the rest of our lives and I will never forget any of it.

Mike D'Alessio

This project was the reason I came to Sussex Tech, I have been waiting to take part in ISR 11 for four years. All the skills I have learned over the last three years have been tested on making this submarine. Honestly I always imagined our submarine with a propeller on the back, but this year we choose to go a different and model our submarine off a blue fin tuna now this challenge was not always easy at times, but in the end I know this was the right decision. All of the great experiences and all I have learned makes a tough project like this worth it. Thanks to all the obstacles we overcame as a team, I know I will always remember this project as one of the greatest accomplishments of my life.

Brian Dubord

The Umptysquatch project has impacted me in many positive ways. Although my time in shop was cut to a shorter time period per week towards the end of the project, I was still involved heavily throughout the experience. Umptysquatch has taught me that some projects simply cannot be done alone. Everyone brings a different experience level and different knowledge to the table when it comes to encompassing projects such as this one, and everyone's culminations of ideas and work can lead to a finished product that no one alone could have come close to. This project has also taught me about time management and budgeting. We had to keep our ideas simple and cost effective while not sacrificing any quality during the design of the project, and budgeting our time efficiently helped to teach me that in life it is much wiser to finish early! You'll never know when you need an extra hour or so to get a quality seal on a fiberglass hull.

Justin Gurry

Not only have I applied several abilities that I have learned over my high school career at Sussex County Technical School helping build our man powered sub, but I have also learned about several things I had no prior knowledge about. For instance, I applied my teamwork abilities when we were first learning how to create the plug for the hull. Despite this particular task being completely new and different, we used skills that we were familiar with to overcome and finish what we started. I feel that in anything you may do, it is crucial to use skills that you know that you can successfully execute.

Tyler Gurski

From the first day we decided to build a submarine I knew it wouldn't be easy, but I never knew the sheer magnitude of this project. It has been very inspiring to see the submarine grow from a small concept to a real tangible thing that we can be proud of. It is by no means a small feeling to see something from our very own minds turn into something as monumental as a submarine. This has been a great process and an incredible learning experience for me. This has been a real and meaningful experience to learn engineering and teamwork.

Travis Lawrence

I have learned so much over the course of the human-powered submarine project. It has helped me improve on so many different levels, such as brainstorming new ideas, doing hands on work, and probably biggest of all, improve my teamwork skills. Working with my classmates was very enjoyable and productive. Whether it's drawing up a design and improving it as much as we can or doing more hands on things like putting systems together. Overall, I would say that of all the projects I have ever done, this is the one I have learned the most from.

John MacDougal

The tail is coming along very smoothly so far and I think it is going to work well on Umptysquatch V. So far, we have completed one of the four planned tails. The first one we manufactured was a standard rectangular hydrofoil fin. We used a micro bead mixture to smooth the fiberglass work, and then sanded the tail smooth. The next tail we are in the process of manufacturing is in the shape of a blue fin tuna's tail, also hydrofoil shaped, this tail is 75% finished and the other two will be extras, one of each, in case of breaking.

Luke Magera

Designing and constructing a human powered submarine for the 11th Bi-Annual International Submarine Race has proved to be a unique challenge. This project has required the careful use of time management and teamwork, as well as the application of theoretical knowledge and pre-existing skills. This is the first time I have had to apply time management skills over the course of ten months, setting goals nearly a year in advance. It felt odd to be planning the manufacture and testing of systems before even having a completed design.

The submarine project has improved my visual communication skills due to the necessity to state your ideas clearly and concisely to other team members. Misunderstood concepts can waste both time and energy. Working on such a large project gave me a new perspective on how proper (or improper) work methods directly affect all others involved. Allowing small errors to go un-mended can have serious repercussions in later phases of the project.

This project has turned out to be the ultimate team-building exercise and will, without doubt, prove to be valuable experience to every participant student throughout the rest of their educational and professional careers.

Tara Mahady

Before I ever set foot into the engineering shop, I knew about the submarines that have been previously made. It was the one thing in this shop I wanted to do from the start. Over the years, my interest in engineering dwindled and the experience in the shop made me realize this is not what I wanted to do. However, it sent me on the right path of wanting to be a high school math teacher. Even though I was not someone who wanted to stay in the shop I wanted to experience of making the submarine, and I'm glad I stated to get this amazing experience.

Jackie McFarland

This project was an amazing experience for me. I have been in the engineering program at Sussex Tech for two years and being involved with the ISR has made me push harder to be an engineer in the near future. I had no idea how much work went behind the previous submarines. Now that I know what efforts were needed and the amount of time and energy that our team is capable of, I am more than satisfied with the progress we have made. People I have talked to look at me in disbelief when I tell them that I am building a human powered submarine in class. They all think I'm joking until they see the pictures; then their jaws just drop to the floor. I have had so much fun with this competition. Even in the stressful moments we have endured, this competition has opened my eyes to the real world of engineering. It has been a memorable journey and I couldn't ask for more.

Dean Romanelli

Since sophomore year I have wanted to be a part of building the submarine for the ISR races. I wasn't deterred at all by the tremendous effort we would need to put into this project to get it done in time. Months into working on the submarine and my opinion hasn't changed. I'm still having fun building it and glad to be a part of this project. My position on the team is head of design which was a challenge at first due to the flood of different designs and parts being produced but I managed to handle it. Piecing everyone's work together, we came up with a solid design. I am very excited to see how it will actually work underwater doing what it was designed to do.

Dennis Rupp

The International Submarine Race project has allowed me to widen my engineering horizons and reach new heights (or depths). Working with the entire Engineering shop has taught me the process of working with a medium size group on such an enormous project. Dividing the project into the major components among our team took the pressure off of us as a group. Being assigned the Control System gave my team members and I the goal to create a system that establishes accurate depth control. We decided to control it with springs to set the system neutral. Our system relies on the forward pushing of the system and pulling back the actuator to control the fins. Working with everyone in my group made it a simple task, but that does not mean it was not tedious. We pushed through our system with an abundance of success. The Sub Race is a great competition that I will not soon forget.

Nick Savarese

As I look back upon this submarine, I recall the first time I set foot in the shop. I had always known what I had wanted to do in terms of engineering, but I never got the chance to be exposed to it. Before I even set foot in the shop, I knew about the submarine project. I was an 8th grader at my local junior high, and it was parked outside of Hobbytown in our local shopping mall. I said to myself," I want to do that; no one else in the county is doing a project that big..." When I first met Mr. Land and saw previous incarnations of the sub, I knew this was big. I learned about ISR, and what this meant to Sussex Tech. It was and is a staple not just to the shop, but also to the school. It sets a standard so high for all technical schools, and shows what is capable out of diligent and focused technical school students. I feel as if it is a responsibility for us as a shop to do the submarine project, even though we are not obligated to do so. We work as a group long and hard on this project, and I know it will show through in Umptysquatch V.

Soleil Schatteman

Deciding on taking the step as a class to compete in the International Submarine Races was a major responsibility and commitment. Looking back now I realize that I may have been a little naïve about the amount of work involved in the entire project. But I also believe that the commitment and hard work involved is really what makes this project so unique. The design aspect of this project was to me the most important, extensive and realistic part of the entire experience. After months of working on the submarine I now know all of the valuable lessons it has taught me. We as a class have learned to take on challenges, work as a team, and accomplish our goals. This year has truly been unforgettable.

Chris Snook

After months of work on this project, I thought maybe my opinion would change about this submarine and the project in whole, alas it has not. I still harbor the same skeptical outlook on this submarine. Though I have softened my stance as the design we have is better than I originally thought. I believe this submarine has a decent chance of accomplish at least one of the goals outlined in our Mission Statement. Even with that I still have my doubts. In my opinion I believe there is an overwhelming chance that this submarine doesn't work. This is based off of my assessment of our propulsion system in whole. I believe that with this design we took too many chances, especially with the dubbed 'kinetic flex lever'.

In the end I will say that the work I put into this submarine is something I can hang my hat on, per say. Though I wanted to invest my time in something other than a submarine I know that my work is greatly appreciated by those who wish great success for this project. This project has taught me one thing above all others, which is how to deal with a situation that I wish I was not in. For that, I can honestly say I am thankful for.

Joe Westley

Upon receiving notice that we would be constructing a human powered submarine I was dismayed. I was worried about the amount of time and energy necessary. After having time to evaluate the situation I conceded that the submarine project was an acceptable use of my senior year. It was proposed to us that we manufacture a submarine modeled off the blue fin tuna. I was preferred to stick to a propeller design due to the fact I believe that it is a design in which our efforts to perfect would be greatly rewarded. The decision was passed to design a fish modeled submarine. After working on the drive system and seeing the full sub modeled I am still worried about its operations and success. I believe this project will be a way for me to follow directions and a group mind set.

Budget and Finances

We cannot thank our sponsors enough for supporting us with both materials and technical advice/guidance throughout our design/build endeavors. The Umptysquatch V Team actually consists of fewer sponsors than in the past due to our use of existing materials and the tough economic conditions existing today. The sponsors for the Umptysquatch V project are summarized below:

1. Fonzarelli's Collision and Auto Repair, Agusta, New Jersey: Outside hull body work and paint.
2. Anonymous National Boat Manufacturer: Providing all of our fiberglass materials
3. Picatinny Arsenal: Providing us with Scuba Equipment
4. Blue Ridge Numerics: Provided us with 20 licenses of CF Design computational fluid dynamics analysis software.
5. Elite Divers: Provided us with free air fills and new scuba divers with discounted equipment
6. Z-Corporation: Provided us with all consumables for operating our rapid prototyping machine
7. Gopro.: Provided us with Gopro underwater video cameras and accessories
8. Mr. Andre Savard: Provided us with invaluable electronics mentorship and manufacturing expertise

In general our Project Manager is responsible for negotiating sponsor relationships, while it the project team members' responsibility to identify needed technology and material items. As in the past, we have found that it is much more feasible and useful to approach companies with specific material requests than to ask for blanket funding. A summary of the costs and financial value of this project is shown in the following table:

Quantity	Item Description	Unit Price	Extended Price (Real Value)	Actual Price Paid
6 People	Scuba Training	$500.00/Person	$3,000.00	$3,000.00
30 hours	Bodywork/Paint	$65.00	$1,950	$0.00
6 People	Scuba Equipment	$1,500.00/Person	$9,000.00	$0.00
1 roll	1.5 oz Matting	$416.00	$416.00	$0.00
1 roll	10 oz cloth	$300.00	$300.00	$300.00
1 roll	18 oz. knit biaxial	$400.00	$400.00	$400.00
5 gallon	Gelcoat	$85.00	$425.00	$425.00
20 gallon	Polyester Resin`	$70.00	$3,850.00	$3,850.00
1 gallon	MEKP	$93.00	$93.00	$93.00
1 Lot	Fiberglass Disposables	$450.00	$450.00	$450.00

1	Manufacturing Propulsion System	$500.00	$500.00	$0.00
1 Lot	Structural Lumber	$200.00	$200.00	$200.00
1 Lot	Assorted Hardware	$500.00	$500.00	$250.00
1 Lot				
2	GoPro Underwater Video Camera	$500.00	$1,000.00	$0.00
1Lot	Electronics	$100	$100	$0.00
1 Lot	Drive/Control Components	$500.00	$500.00	$0.00
1	CF Design CFD Software	$30,000.00	$30,000.00	$0.00
1 Lot	Rapid Prototype Consumables	$4,000	$4,000	$0.00
		TOTALS	**$56,684.00**	**$8,968.00**

The table shows many items at an actual price paid of $0.00, which is due to donations by our various sponsors. As can be seen in the summary table, the project value of our submarine is $56,684. Thanks to our gracious sponsors, we were able to complete this project for $8,968.00. given the extremely difficult economic times that our country is enduring at this time, we cannot thank our sponsors enough for their continued support. Without their help, we would not be able to continue to be associated with this challenging engineering design experience.

First Ever Project Poem

The Lore of Umptysquatch V

A hull design is what we need

The tuna fish shall plant the seed

A hydrofoil we will take

From our fish friends in the lake

Propulsion shall be to and fro

Fast as lightning we will go

Control shall be our guide

With fins of fish on the side

And down the course we will swim

With windows to see where we've been

If we shall have a fault or flaw

Our safety system then becomes law

Across the line of red we desire

Next race we shall aim higher

Until then our sub will shine

The glory shall be yours and mine

By:

Dean Romanelli