UNIVERSIDAD SIMÓN BOLÍVAR

HUMAN POWERED SUBMARINE
PICUA II
2011

DESIGN REPORT 2011

UNIVERSIDAD SIMÓN BOLÍVAR

ASME USB

HPS USB

TABLE OF CONTENTS

D= design, A= analysis, F= fabrication

I. UNIVERSIDAD SIMÓN BOLÍVAR

Created in 1967 and located in Baruta Municipality of Miranda State in Venezuela, Universidad Simón Bolívar is a public, free and experimental institution that has an important place in the development of the nation in scientific, technological and cultural fields, and where students acquire theoretical and practical knowledge applied directly to the industry to resolve diverse natural problems.

Though it is a young university, its students work hard in practice to provide multidisciplinary engineering solutions for Venezuela and several communities around the world, and this makes the HPS-USB team, a great group that can make and give possible and positive answers to contribute to their country.

Young but dynamic, with all members of the community, students and professors, are continually adapting to the changing World to get maximum benefit by creating technology and putting it at the service of all, meeting the demands of a developing country and making the USB an elite institution in development and scientific research.

Fig.1 UNIVERSIDAD SIMÓN BOLÍVAR – U.S.B.

II. HPS-USB 2011 TEAM

CHAIN OF COMMAND

This is the second time that students from this university have designed and built a Human Powered Submarine, hence it took hundreds of hours to search, recruit and organize again, people who feel identified with this project according to the division and their field of study. At the time, we have the same organization than the past event (10th ISR), being organised in technical and administrative divisions working in parallel to accomplish within the stipulated time the design, construction, put in march and training.

Our organization remains the same and is shown in figure 2:

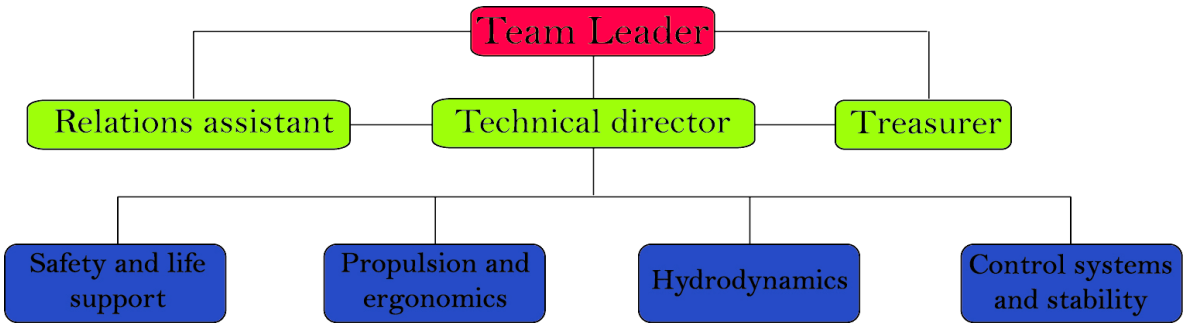

Fig. 2 Chain of command of HPS-USB team

- Starting with the *blue zone*, there are four (4) technical divisions that build and test all their final designs in continuous communication with the Technical director who approves or rejects the construction and can offer suggestions to redesign the model. The Technical director has a relevant place in the administrative decisions and is in constant communication with relations assistant and treasurer.

- In the *green zone* there are three (3) administrative divisions that play an important role in all office matters and who are responsible for obtaining monetary and material support from any enterprise and administrating all resources.

- Finally, the *red zone* is the Team Leader, who represents us in any situation to take decisions between the enterprises, university, professors and the team. The Team Leader is in constant communication with the administrative divisions, especially with the Technical Director.

III. HISTORY OF PICUA

The first time at the event we had many problems using electronics in the submarine (PICUA I, figure 3) for the directional system. The system fled with water in the first run at the 10th ISR. This problem resulted in a four days run to change the entire directional system from electrical to mechanical. The last day, after change that system, the team did its first and unique race and registered a speed of 1,837 knots. Directors Comitee, were assigned to the team the Persistance and Resourfulness Award, due to the great perseverance

and effort to get across the finish line at the event.

Fig. 3 PICÚA I

AWARD FOR PERSISTANCE AND RESOURCEFULNESS

IV. TECHNICAL DIVISIONS

1. HYDRODYNAMICS

1.1 HULL

DESIGN AND ANALYSIS

The hull is the same designed by the Hydrodynamics Division of the HPS-USB Team for 10th ISR, through numerical analysis in ANSYS CFX® and XFOIL® software. Originally with 11,48 feet long (3500mm), it was designed for

Caribbean Sea water currents close to Venezuelan coasts, with density and viscosity regulated by annual temperatures variation.

It was conceived in three parts: nose, body and tail. The speed for all simulations was 6 knots (3,087 m/s) and final parameters were set as shown in figure 4:

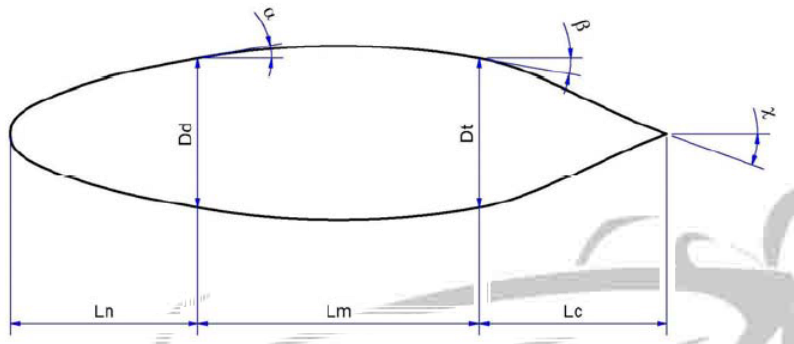

Fig. 4 Profile geometric variables

1. Length of nose (Ln): length measured in the longitudinal axis of the profile from the leading edge to the point where you want to end the nose of the submarine. In this length, profile is defined by a parabolic equation (see equation 13 in Table 1).

2. Length of body (Lm): length measured in the longitudinal axis of the profile from the point where the nose of the submarine ends to the point where the tail starts. In this length, profile is defined by a polynomial equation (see equation 14 in Table 1).

3. Length of tail (Lc): length measured in the longitudinal axis of the profile from the point where the tail starts, to the trailing edge of the profile. In this length profile is defined by an exponential equation (see equation 15 in table 1).

4. Diameter front (Dd): diameter of the submarine measured at a Ln distance from the leading edge.

5. Diameter rear (Dt): diameter of the submarine measured at a Lc distance from the trailing edge.

6. End angle nose (α): angle between the straight line tangent to the profile in the point where the nose ends and the horizontal line, measured in an anticlockwise direction.

7. Start angle tail (β): angle between the straight line tangent to the profile at the point where the tail starts and the horizontal line measured in clockwise direction.

8. Trailing edge angle (χ): angle between the straight line tangent to the profile in the trailing edge and the horizontal line measured in clockwise direction.

Table 1.- Conditions and equations generating profiles

Zone	Conditions	Equation
Nose	1. $X = Ln \Rightarrow Y = \frac{Dd}{2}$ 2. $X = Ln \Rightarrow Y' = \tan(\alpha)$	$Y(X) = A \cdot \left(\frac{X}{Ln}\right)^{1/B}$ Ec. 13
Body	1. $X = Ln \Rightarrow Y = \frac{Dd}{2}$ 2. $X = Ln \Rightarrow Y' = \tan(\alpha)$ 3. $X = Ln + Lm \Rightarrow Y = \frac{Dt}{2}$ 4. $X = Ln + Lm \Rightarrow Y' = \tan(-\beta)$	$Y(X) = M \cdot X^3 + N \cdot X^2 + O \cdot X + P$ Ec. 14
Tail	1. $X = Ln + Lm \Rightarrow Y = \frac{Dt}{2}$ 2. $X = Ln + Lm \Rightarrow Y' = \tan(-\beta)$ 3. $X = Ln + Lm + Lc \Rightarrow Y = 0$ 4. $X = Ln + Lm + Lc \Rightarrow Y' = \tan(-\chi)$	$Y(X) = G \cdot e^{-H(X-I)^2} - J$ Ec. 15

After determining how to generate profiles and conditions of the study, the first two-dimensional XFOIL® analysis was carried out. For this, the effect of each geometric variable on the drag coefficient was studied separately to determine which had a major impact on this one.

The variables were divided in two groups, to make the behavior study easier and reduce the number of profiles to be tested. This division led to two groups as shown in figure 4.

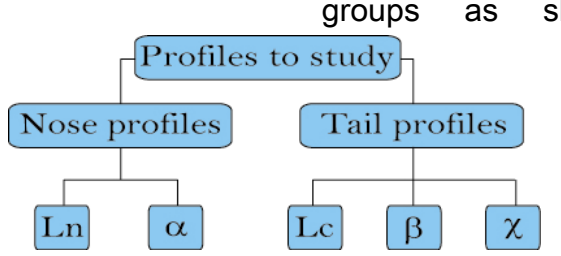

Fig. 5 Division of the geometric variables in groups

Based on this division, a series of profiles were generated putting the different values to the involved variables in each group, it was calculated the Drag

Coefficient of each profile with the tool previously mentioned and then it was possible to analyze the relation between the mentioned coefficient and the geometry of the profile.

To increase the precision for the study of the drag and add turbulence effects to the simulation, it was decided to make three-dimensional simulations using ANSYS CFX® with some selected profiles. The profiles used in this part of the study were generated combining the two nose geometries that produced less drag, with the tail geometries that did the same in their group. The most critical areas for the calculations are the nose and tail of the profile, due to the relatively high pressure gradients there.

Considering this, the size of the elements located in the mesh was controlled, with the controlled space shown in figure 6. In addition each of the areas in figures 7, 8 and 9 are shown in detail.

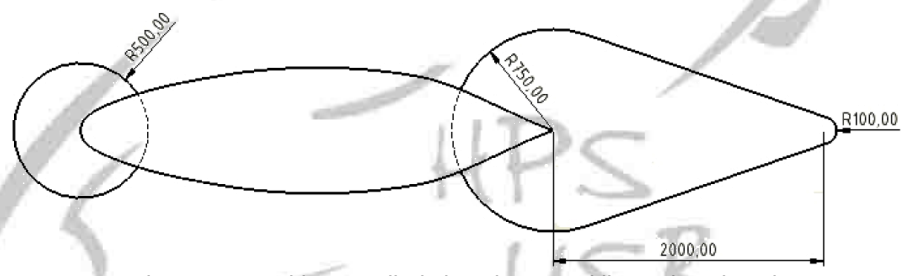

Fig. 6 Zones with controlled size elements (dimensions in mm)

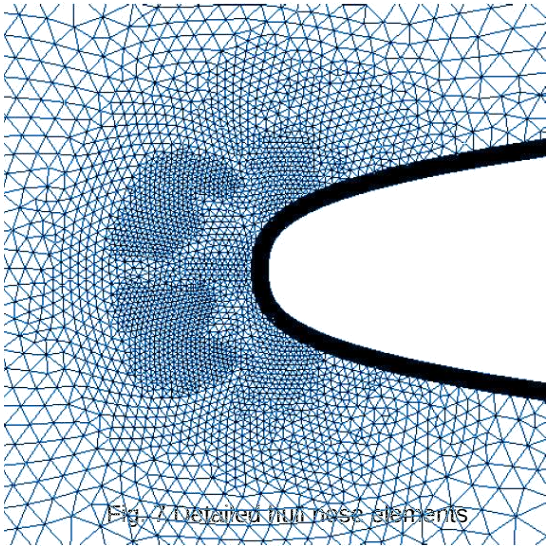

Fig. 7 Detailed hull nose elements

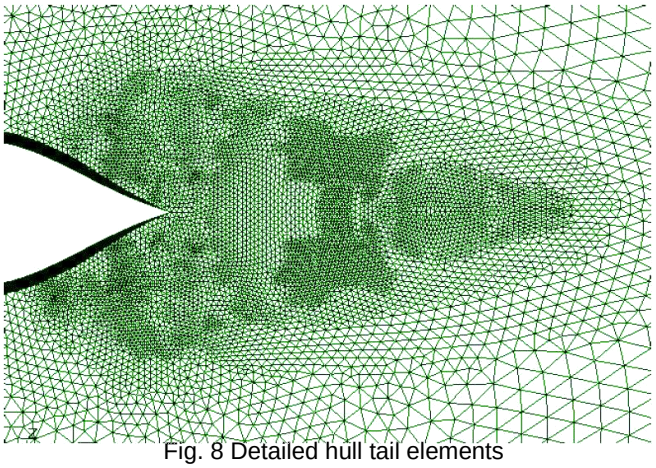

Fig. 8 Detailed hull tail elements

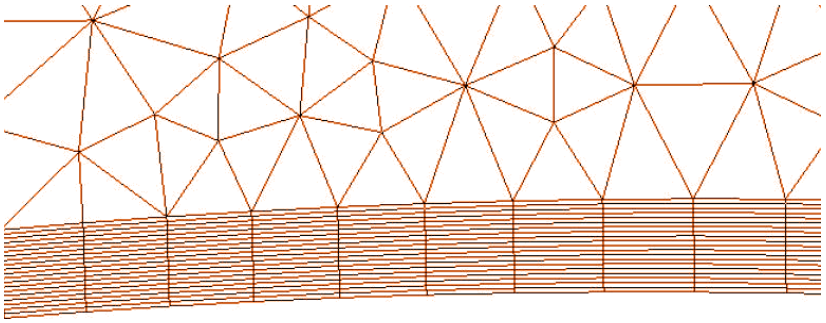

Fig. 9 Detailed hull surface elements

NOSE PROFILES

Then in table 2, figures 10 and 11 show the drag coefficient obtained for different values of the variables in the nose of the hull.

Table 2.- Drag Coefficient for different values of Ln y α

		α			
		8	10	12	14
Ln	600	0,05776	0,04483	0,02589	0,02427
	800	0,05003	0,01813	0,01722	0,02312
	1000	0,01122	0,01043	0,01580	0,02226
	1200	0,01050	0,01033	0,01554	0,02186
	1400	0,01034	0,01029		
	1600	0,01050	0,01033		

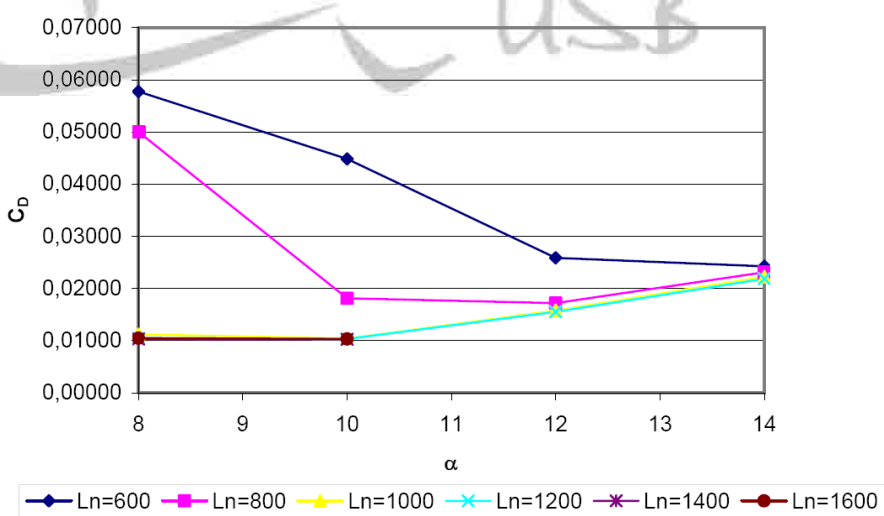

Fig. 10 Drag Coefficient vs. α for different Ln

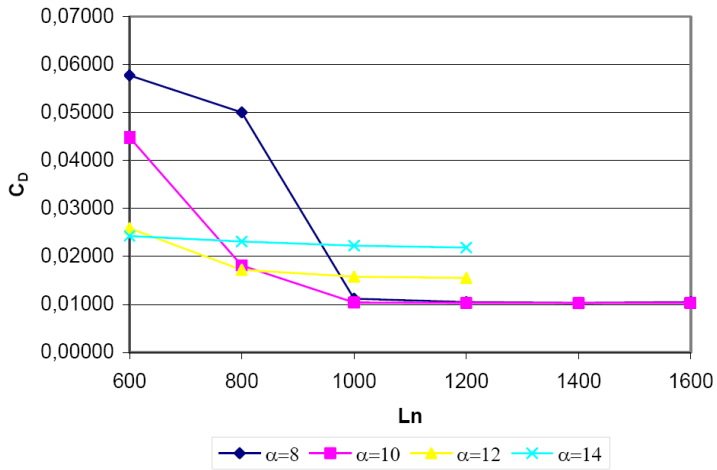

Fig. 11 Drag Coefficient vs. Ln for different α

You can see that the combination of the values that produce less drag is Ln=1400mm (4.59 ft) and α =10º. However, it is considered that this length could be harmful to accomplish the maximum length condition of the submarine, therefore the profile with Ln=1000mm (3.28 ft) and α =10º is the better profile chosen. This change can be considered valid if one takes into account that the difference between the drag produced for both is only 1,34%.

In an attempt to find a parameter that defines the combination of Ln and α, the variation of the drag coefficient (C_D) according to Ln/α, was studied and the results are presented in figure 12.

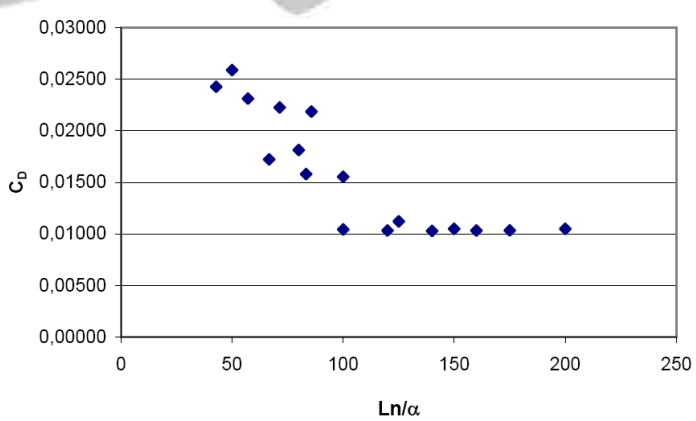

Fig. 12 Drag Coefficient vs. Ln/α

In the decline of C_D when Ln/α is increased and it is constant from Ln/α =100.

TAIL PROFILES

The following tables and figures show the obtained results of drag coefficient according to Lc, for different values of β and χ.

Table 3.- Drag coefficient for different values of Lc, β y χ

		Lc							
		800	1000	1200	1400	800	1000	1200	1400
		$\chi = 16$				$\chi = 20$			
β	6	0,07220	0,02364	0,01851	0,01864	0,06517	0,02603	0,02020	0,01975
	8	0,01223	0,00977	0,01401	0,01609	0,01291	0,01053	0,01599	0,01724
	10	0,01154	0,00986	0,01148	0,01455	0,01198	0,01043	0,01402	0,01558
	12	0,01125	0,00994	0,01257	0,01418	0,01157	0,01094	0,01377	0,01495
	14	0,01096	0,01073	0,01286	0,01404	0,01149	0,01254	0,01370	
		$\chi = 24$				$\chi = 28$			
	6	0,05994	0,02892	0,02240	0,02150	0,05831	0,03202	0,02530	0,02378
	8	0,01412	0,01191	0,01812	0,01866	0,01593	0,02088	0,02075	
	10	0,01289	0,01188	0,01594	0,01699	0,01464	0,01496	0,01826	
	12	0,01248	0,01332	0,01518		0,01444	0,01691		
	14	0,01288	0,01460			0,01543	0,01668		

You can see that the Drag Coefficient trend is high when β angle is low (see figures 13, 14, 15 and 16), and this is due to the sudden change of direction that water should take to follow the geometry of the profile, that produces a low pressure zone in the tail of the same and hence more drag. This phenomenom occurs in the same form when the β angle is high for certain lengths and combinations of the χ angle.

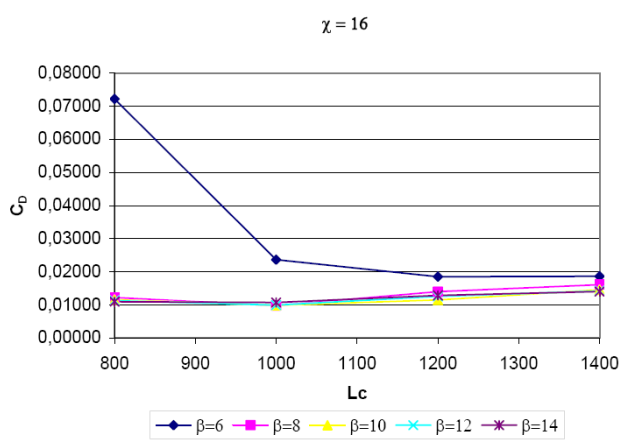

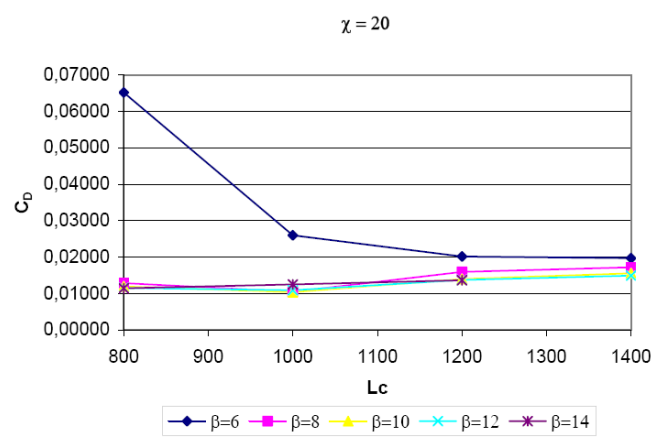

Fig. 13 Drag Coefficient vs. Lc, for values of β y χ =16

Fig. 14 Drag Coefficient vs. Lc, for values of β y χ =20

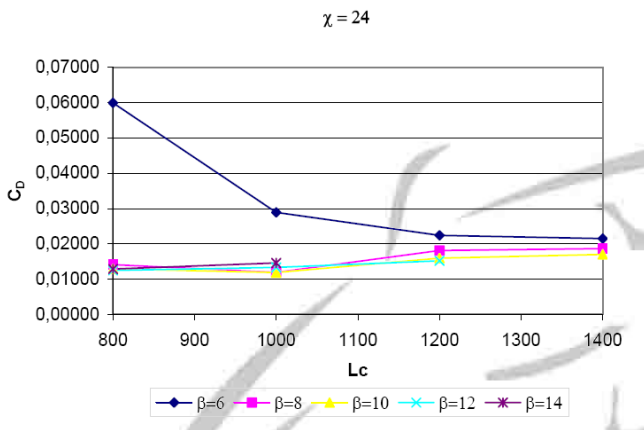

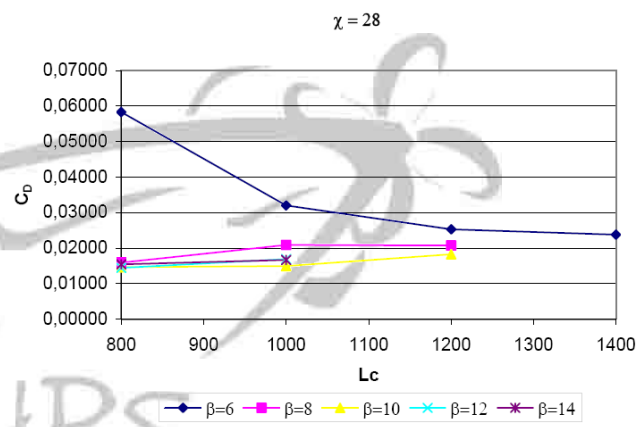

Fig. 15 Drag Coefficient vs. Lc, for values of β y χ =24

Fig. 16 Drag Coefficient vs. Lc, for values of β y χ =28

These graphs show clearly that for each possible combination of β and χ, the lowest Drag Coefficient is achieved for a length of Lc=1000mm. Then in table 4 and figure 17 shows the C_D according to β y χ for Lc=1000mm.

Table 4.- Drag Coefficient for different values of β y χ, for Lc=1000mm

		χ			
		16	20	24	28
β	6	0,02364	0,02603	0,02892	0,03202
	8	0,00977	0,01053	0,01191	0,02088
	10	0,00986	0,01043	0,01188	0,01496
	12	0,00994	0,01094	0,01332	0,01691
	14	0,01073	0,01254	0,01460	0,01668

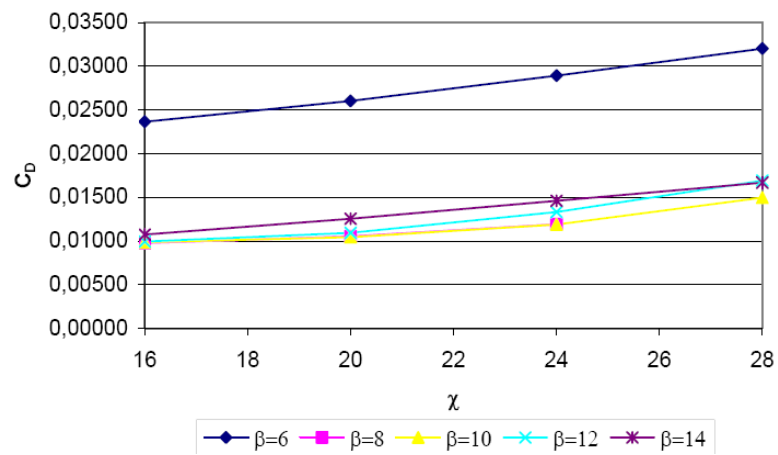

Fig. 17 Drag Coefficient vs. χ , for different β values y Lc=1000mm

It clearly shows the profile that produce less drag is that with β=8º and χ=16º. In a similar way, as was done for the profiles of nose, figure 18 shows the variation of C_D according to β/χ for different values of Lc.

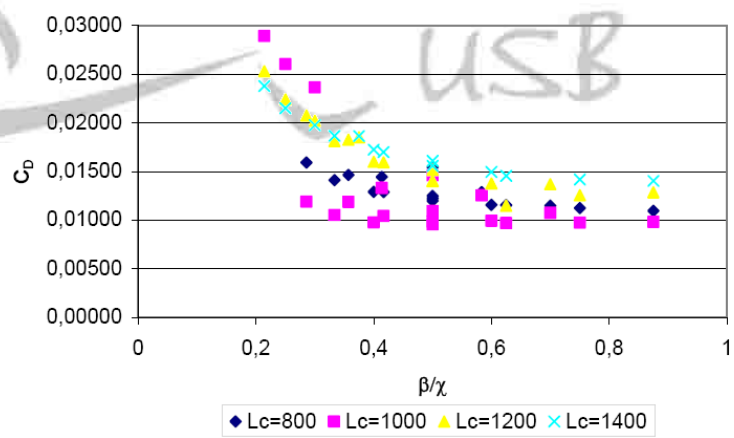

Fig. 18 Drag Coefficient vs. β/χ for different Lc values

In the decline of the C_D when the parameter β/χ is close to 1, making the C_D constant from certain value that depend on Lc. Based on the two-dimensional results, it was found that the optimum parameters for the nose of the profile are Ln=1000mm, α=8º or Ln=1000mm, α=10º, while the optimum

for the tail are Lc=1000mm, β=8º, χ=16º or Lc=1000mm, β=8º, χ=16º.

THREE-DIMENSIONAL NUMERIC SIMULATIONS

Combining the optimal parameters of nose and tail obtained in the two-dimensional analysis, were selected four (4) profiles for three-dimensional simulations.

Table 5.- Drag force vs. Speed for the three-dimensional profiles

Speed (knots)	Speed (m/s)	Drag force (N)			
		1	2	3	4
1	0,514	5,009	5,049	4,809	4,836
2	1,029	19,337	19,285	19,449	19,441
3	1,543	35,909	36,082	35,929	36,100
4	2,058	60,982	61,273	61,027	61,312
5	2,572	92,075	92,480	92,120	92,552
6	3,087	128,952	129,544	128,986	129,585

Table 6 presents the same data previously expressed as Drag Coefficient according to Reynolds number. For the calculation of Cd,–the area of the longitudinal section of each profile was used, and these values are in Table 7.

Table 6.- Drag Coefficient vs. Re for the Three-dimensional profiles

Re	Cd			
	1	2	3	4
2005000	0,01597	0,01605	0,01594	0,01553
4010000	0,01542	0,01523	0,01566	0,01560
6015000	0,01272	0,01274	0,01286	0,01288
8020000	0,01215	0,01217	0,01243	0,01230
10025000	0,01175	0,01176	0,01187	0,01189
12030000	0,01142	0,01144	0,01154	0,01156

Table 7.- Areas of the longitudinal section of each profile

Profile	Area (m^2)	Area (ft^2)
1	2,313	24,897
2	2,321	24,983
3	2,290	24,649
4	2,297	24,725

It is possible to observe that there are minimal differences in the drag force that occurs in the profiles studied. Profile #1 presents a slight advantage over the other because net force generated is slightly lower. Due to the mentioned previously, the profile #1 is chosen as the optimal profile to be used in the HPS-USB prototype.

Table 8 presents the obtained results for the Cd of the final four profiles, obtained in two-dimensional and three-dimensional form.

Table 8.- Summary table of the results for the Three-dimensional profiles

Profile	C_D		D (N)
	Xfoil	CFX	
1	0,02486	0,01142	128,952
2	0,01015	0,01144	129,544
3	0,00985	0,01154	128,986
4	0,00986	0,01156	129,585

FINAL DATA OF THE SELECTED PROFILE

Table 9 presents in summary form some important data about the selected profile, figures 19, 20 and 21 show its dimensions and a tentative distribution of space in the hull.

Table 9.- Physical properties of the selected profile

Property	Value
Lenght	3500 mm
Maximum width	904 mm
Volume	1,375 m^3
Position of the center of pressure	1642 mm
Mass water displaced	1408 Kg

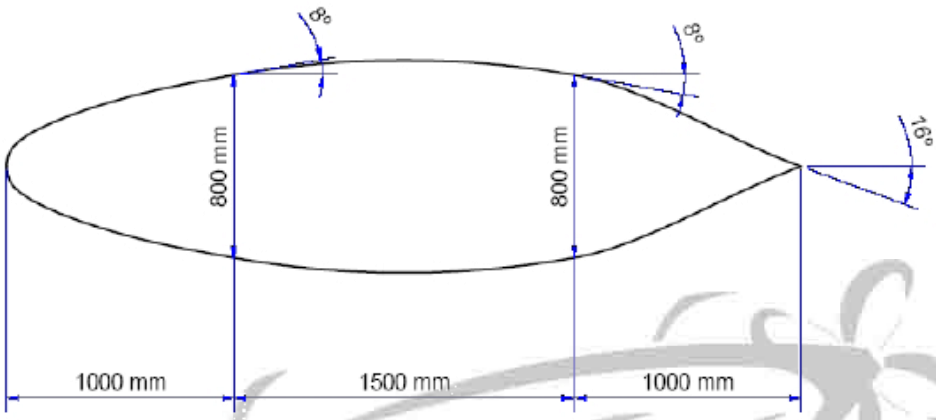

Fig. 19 Parameters of the original profile selected

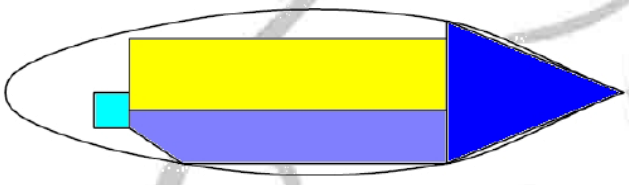

Fig. 20 Side view

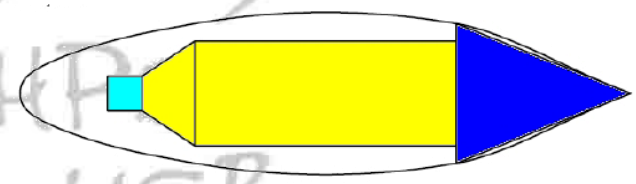

Fig. 21 Top view

Space occupied for the pilot

Transmission and propulsion systems

Controls

Life support, direction control, stability control and ballast systems

Later, HPS-USB Team decided to rescale all dimensions proportionally in a

factor of 85,71% in relation to the hull originally calculated. The results were less drag and mass displaced than the original. Finally these are the definitive data for the hull (see table 10):

Table 10.- Final properties of the profile selected

Property	Value
Lenght	3000 mm
Maximum width	775 mm
Volume	0,895 m^3
Position of the center of pressure	1407 mm
Mass water displaced	916,8 Kg

Figure 22 shows the final draft of the three-dimensional design in Autodesk Inventor®. This solid was generated from the line in the upper left corner (with a revolution in its longitudinal axis). This line is the result of the three equations previously mentioned in table 1 with boundary conditions defined and resolved in Mathcad®.

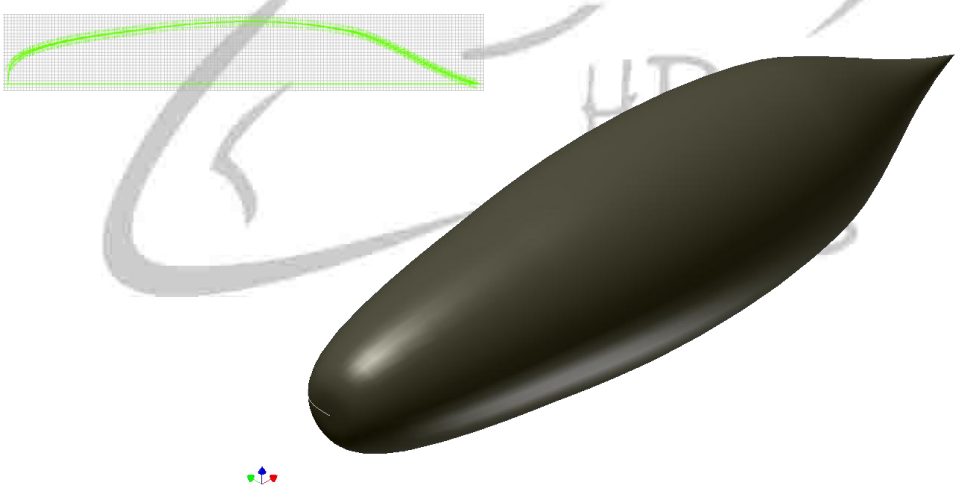

Fig. 22 Final 3D view

FABRICATION

The manufacturing process was based on three stages:

1. Pre-mould: in this stage due to the symmetry, only a longitudinal half of the submarine with bulkheads was developed. The radius for each bulkhead was taken directly from the equations. The space between the bulkheads was filled with fast drying polyurethane (expandable polymer), as

shown in figure 23. Later, it was covered with multiple layers of putty and was sanded until the desired surface finish and shape (see figure 24).

Fig. 23 Bulkheads with putty

Fig. 24 Surface finish

2. Mould: was obtained coating the pre-mould with ordered and disordered fiberglass layers and enough resin to obtain the desired stiffness. Later, it was painted with gelcoat to achieve the best surface finish without porosities (see figure 25).

Fig. 25 Final mould

Fig. 26 Hull with gates and hatch

3. Pieces: this is the final stage of hull production. In the mould previously oiled with wax, layers of fibreglass with enough resin to achieve the desired stiffness were placed. These pieces in the external layer, were painted with gelcoat to provide a perfect surface finish. There were two (2) halves for the realization of the hull; to compete at the 11th ISR. Gates and hatch were cut directly from the hull (see figure 26 above).

1.2 FINS

DIRECTIONAL FINS DESIGN AND ANALYSIS

The NACA 4-Digit and 4-Digit modified

Short description of the profiles

*Example: **NACA 2415-63***

NACA 2415-63: the first digit designates the Maximum Camberline Height is as a percentage of the chordlength. In this example, the 2 implies that the camberline will reach a maximum height equal to 2% of the overall chordlength. A value of zero means that the airfoil is symmetrical.

NACA 2415-63: the second digit designates *WHERE* the Maximum Camberline Height will occur chordwise as a percentage of chordlength in tenths. In this example, the number 4 implies that the camberline will reach its maximum height at a distance of 40% of the way back from the leading edge.

NACA 2415-63: as with all of the NACA airfoils, the last two digits combine together to designate how *thick* the airfoil is as a percentage of chordlength. In this example, our airfoil will be 15% of the chordlength thickness.

Modified Parameters Defined

NACA 2415-63: The first of the two trailing modification digits is the "Leading Edge Roundness Factor." A value of 1 leads to a very sharp nose and it becomes more bulbous as the number increases to 9. A value of 6 produces a leading edge very similar to the standard NACA 4-Digit Series.

NACA 2415-63: The last digit for the modified parameters indicates the location (in tenths of a percent chord) of the maximum thickness. Aside from the overall thickness (15% in this case), this trailing number is the only way to alter the thickness distribution of the NACA 4-Digit series. A value of 3 will create a thickness distribution nearly identical to that of the un-modified NACA 4-Digit series.

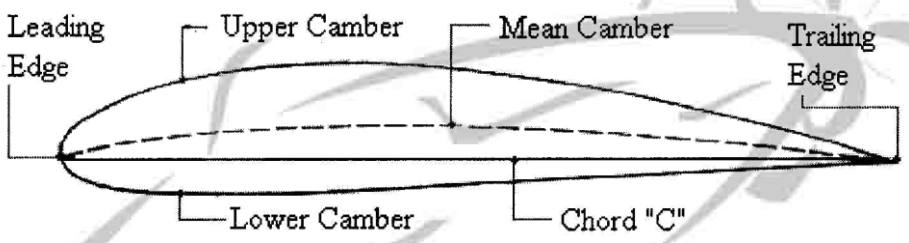

Fig. 27 Standard NACA profile

For this competition, directional fins are the same used as stabilizer fins at 10th ISR. These fins were developed under the study and analysis of NACA profiles of 4-digit and 4-digit modified. The software employed in the analysis was Design Foil R6®, which has a basic tool to set parameters as Reynolds and Mach number. All analysis for the fins, were performed with a Reynolds number equal to 677.10^3, from the fixed speed for all analysis equal to 3,09 m/s, longest lenght of the chord equal to 220 mm and properties as density and dynamic viscosity corresponding to the temperature of the water in NSWC DTMB.

In the analysis of each profile is sought:

- A coefficient of lift and moment equal to zero, so it is completely symmetrical in one of its planes.
- The minor coefficient and drag force

(after the manufacturing process depends on the surface of the fin).

- The turbulence generated farther away from the leading edge measured on the longitudinal axis of the profile.

Tables 11 and 12, shows the analyzed profiles with their respective coefficient and drag force generated measured in Newtons. The drag force was calculated from the equation 1, where ρ_∞ is the fluid density in the free water flow, S is a reference length and V_∞ is the speed of the fluid in the water flow.

$$C_D = \frac{D}{\frac{1}{2}\rho_\infty V_\infty^2 S} \qquad (1)$$

Table 11.- 4-digit profiles analyzed

NACA 4-digit		
Profile	**Cd**	**D (N)**
0010	0,0082	39,11
0012	0,0090	42,93
0015	0,0090	42,93

Table 12.- 4-digit modified profiles analyzed

NACA 4-digit modified		
Profile	**Cd**	**D (N)**
0010-35	0,0058	27,66
0010-64	0,0070	33,39
0010-65	0,0061	29,09
0012-55	0,0057	27,09
0012-64	0,0071	33,87

For water conditions set, the NACA 0012-55 profile was selected as the directional profile which reported minor drag coefficient and the lowest drag force (see Table 12 on previous page). It is a symmetrical profile that breaks the flow in the leading edge and generates the turbulence at 67,6% from the length of the chord (measured from the leading edge) as shown in figure 28.

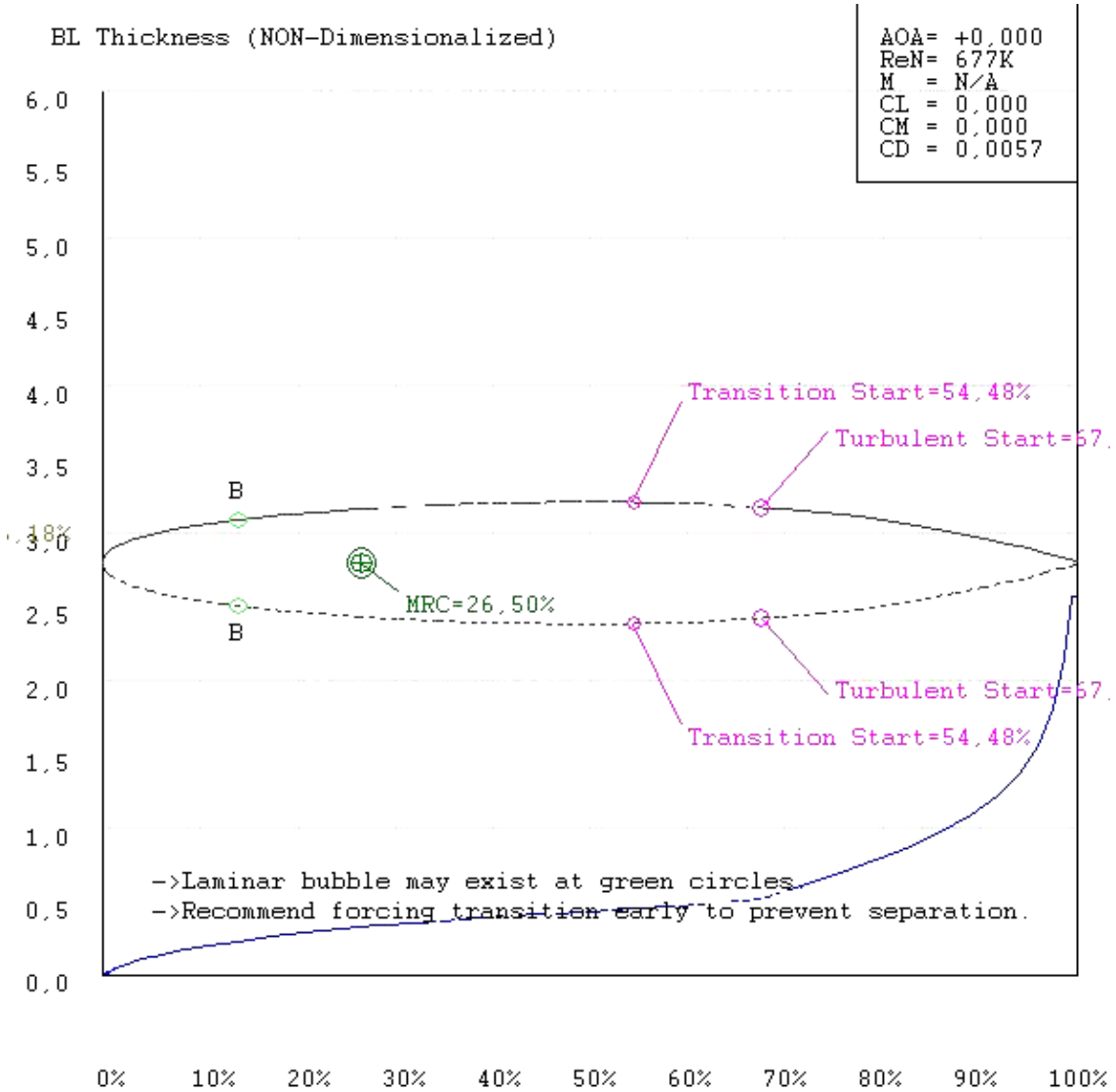

Fig. 28 Transition and turbulent for NACA 0012-55 profile at a 677.10^3 Reynolds number

With the previous profile a design of the directional fin in Autodesk Inventor® was carried out which breaks the flow in the leading edge and the flow lines pursue the natural course when the flap rotates at a maximum angle equal to 15 degrees generating the lowest turbulence possible (see figure 29 on next page).

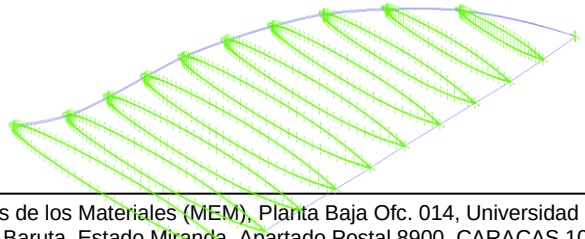

Fig. 29 Curve used to generate the 3D profile

In figure 30 the projected lateral area of the flap perpendicular to the flow lines is equal to 185,4 cm^2 with a maximum rotation of 15 degrees which working in pair move the center of lateral area of the submarine to originate the necessary moment to turn the submarine in the desired direction.

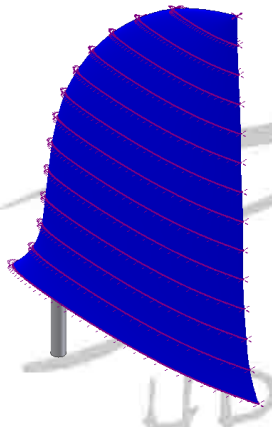

Fig. 30 Final 3D view of the directional fin

Directional fins were placed in a position where the turbulence generated by the movement of the flaps would not affect the efficiency of the propeller and enough distance from the center of gravity of the submarine to have enough moment that generate a fast rotation of all the system. This time, stabilizer fins were eliminated to reduce the drag and to increase our speed in the water in all races.

FABRICATION

For the manufacturing process of the four (4) fins the solid was modelled in Autodesk Inventor® in Standard Acid Text format (SAT) to be encrypted and machined with an automated drilling system in computer numerical control (CNC). The total work took 160 hours aprox. to obtain the desired geometry for each fin. The material chosen was ultraleno, which is a ductile acrylic with S_y equal to 4 ksi that can resist impacts at the maximum speed of the submarine without damage. Hydrodynamics Division chose ultraleno because it is a light material and its density is very similar to the water to provide neutral flotage to the submarine ($\rho_{water} \cong 999{,}1 Kg/m^3$, $\rho_{ultraleno} \cong 950 Kg/m^3$).

The manufacturing process was based on three stages:

1. First, it was machined a face of the material to obtain a half of the desired geometry (see figure 32).

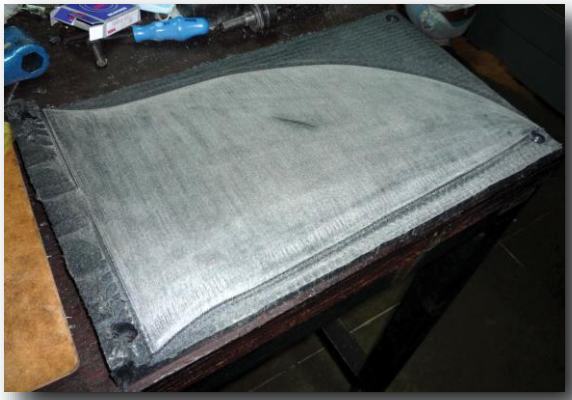

Fig. 32 Fin machined on one side

Fig. 33 Mould machined

2. A mould was made for each type of fin with the cavity of one face (half fin), with the clear purpose of supporting the machined face on the cavity, providing a flat surface for the second pass on the other side of the material and to complete the geometry (see figure 33).

3. The faces of the fins were coupled with the mould and then the CNC completed the geometry on the remaining side (see figure 34 and 35).

Fig. 34 Fin with mould (coupling)

Fig. 35 Fin machined on both faces

Finally, directional fins were drilled in the base to make the cavity for the axis that provide movement directly from the control systems.

1.3 PROPELLER

DESIGN AND ANALYSIS

To design the propeller various parameters identified in the analysis of the hull were taken into account. The speed of flow (6 knots) and the drag force (129 N). Also, a new variable pitch system was designed to optimize the propulsion system and reduce the torque in the boot and maximize the acceleration.

The design of the propeller was carried out with a free license program in Internet named JAVAProp, developed by Martin Hepperle. This is a fairly simple software that needs certain values to start its calculus such as: number of blades, spin speed, propeller diameter, hub diameter, submarine speed and necessary power or thrust.

Propeller diameter was elected based on the maximum diameter of the hull to maintain safety of the blades and divers. Propeller diameter was set in 0,5m.

Hub diameter was taken of the design of the variable pitch cone equal to 0,12 meters.

Many copies were taken due to the manufacturing process.

The transmission ratio was designed with 1:4, this ratio is higher

than the used in PICUA 1 (1:3). From research a normal human pedals at 60 rpm, being conservative. Taking into account the transmission ratio the final rpm is 240.

From research a normal human can generate 373 Watts of power, this is a conservative value.

To optimize the propeller four airfoils from hub to shroud were selected. The following profiles were selected respectively: E193, Re=100'000; E193, Re=300'000; E193, Re=300'000; E193, Re=100'000.

The program calculated the most efficient propeller with an efficiency equal to 89,6%. The propeller given by the program was modified to have an area in the base capable of resisting the forces generated while turning, taken carbon steel AISI 1020 with S_u= 1,02 ksi as material.

The final profile for the blades is showed in figure 36.

Fig. 36 Profile selected for the propeller

FABRICATION

The manufacturing process was the same as for the fins, but this time the CNC had four axis to drill the material. Total work took 12 hours aprox. for each blade.

2. PROPULSION AND ERGONOMICS

2.1 CENTRAL CRANK SYSTEM AND POWER TRANSMISSION (FIGURE 37 ON NEXT PAGE)

DESIGN AND ANALYSIS

The principal aspect in the design was the choice of the pilot position. With the experience of the first prototype, the horizontal position mouth down was elected, where the transmission is placed in the back part of the hull. The possibility of using the variable pitch in the propeller was studied, this implied having special care in the location of the propulsion system shafts.

The transmission philosophy for this year submarine was simple. To improve the resistance and reliability from the PICUA I propulsion system. One of the 2009 team's problem was the low resistance to torque of the

transmission shaft due to the amount of couplings.

To avoid the same problem as last competition, the new team decided to avoid all the shaft junctions, making the transmission as directly (from the pedal to the blades) as possible. However, the output RPMs needed to be increased in order to comply with the new propeller design. That's why a gear box was designed to increase in a 1:4 ratio the RPMs of the output shaft.

The transmission was made with aluminium (static parts and components) for being of a lightweight and rigid material that allows it to be moulded and presents certain resistance to the corrosion of the water. Other components like shafts were made with carbon steel.

The shape, position and location of the chest support for the pilot, has a great influence in the performance of the same. Many trials in the test bench gave to the division the optimum inclination angle for the chest support.

Fig. 37 Transmission system of HPS-USB submarine PICUA II

The gearbox can be appreciated in figure 38. This “three step” configuration allows using small gears to increase the transmission ratio, and more important, it gives a space between the first and the third shaft to allow the variable pitch system to work. The first gear step consists on a pair of 90 degrees bevel gears 1:1.4 ratio which changes the axial orientation of the propulsion system (perpendicular). The second and third gear step consists on a pair of spur gears 1:1.4 ratio for each one. All together results in a 1:4 propulsion ratio.

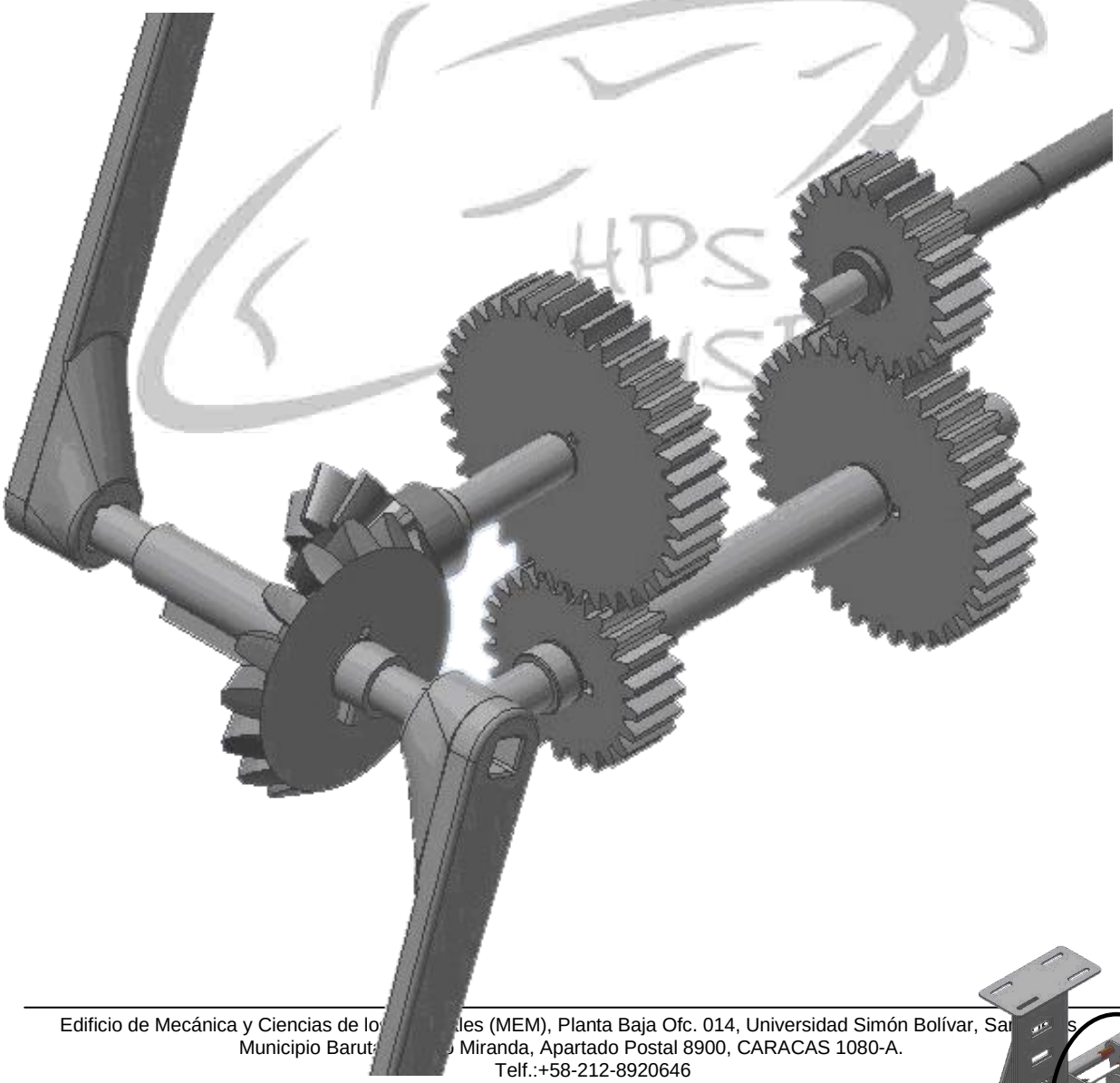

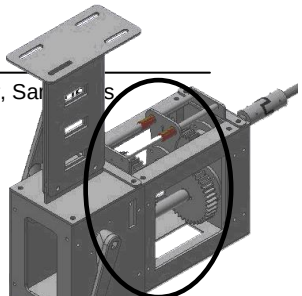

Fig. 38 Propulsion system's gearbox

The box itself was carefully designed to reduced maintenance time. It consists on vertical walls attached by bolts with several columns (as appreciated in figure 39). This reduces assembly time and ensures the shafts to be aligned. The vertical walls, all made from aluminum, where designed with a special cut to allow each shaft to be installed or uninstalled without affecting the rest of the transmission parts. Finally, many holes where designed to allow "on site" work with wrenches without having to take out of the submarine the entire box, and to allow water to flow out once the submarine is out of the water.

Fig. 39 The box

The propulsion shaft is divided into two independent shafts joined by a spider coupling. This was done to allow the assembly and disassembly of the complete transmission (figure 40).

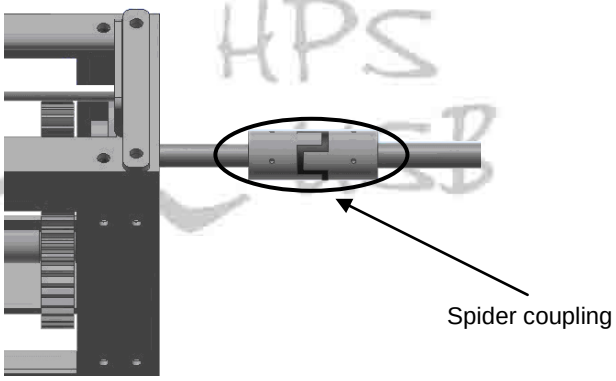

Fig. 40 Spider coupling

At the end of the propulsion shaft an axial bearing was used to allow the shaft to rotate while it pushes the submarine forward. As this is the bearing that holds the complete propulsion power, its base is attached to the fiberglass hull by 8 stainless steel 8mm bolts to ensure the resistance of the configuration.

The shafts materials vary depending on the load. The first, second, and third shaft where made from aluminum. The last shaft (both parts) was made from stainless steel

because of the inner hole designed to allow the variable pitch shaft to pass through.

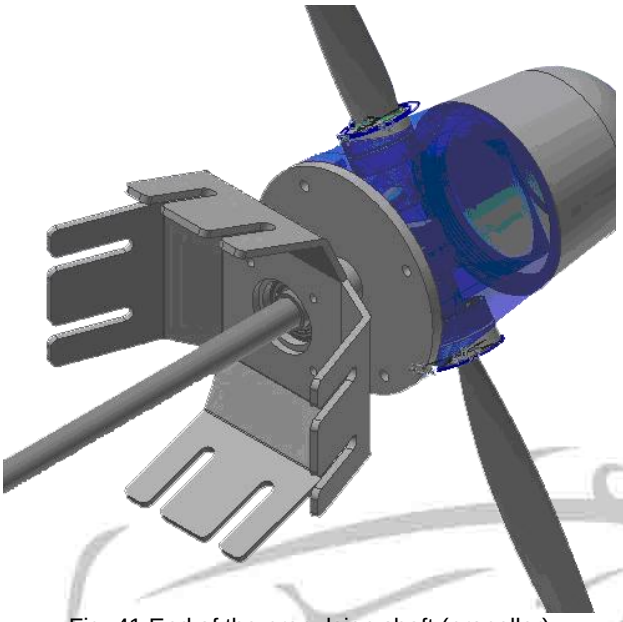

Fig. 41 End of the propulsion shaft (propeller)

FABRICATION

All structural and static pieces and flat gears were cut with an abrasive water jet, bent and welded to achieve the desired geometry; except the bevel gears which were fabricated with wheel and drill operation. Mobile parts as pedals and bearings were purchased.

2.2 MECHANICAL VARIABLE PITCH SYSTEM

DESIGN, ANALYSIS

The variable pitch propeller was designed to allow a constant pedalling rhythm. It increases the pilot's concentration and the pedalling efficiency. This system works by having an internal shaft, concentric to the transmission shaft, which moves axially. This axial movement makes a block-arm set, shown in figures 42 and 43, to vary the propeller blades angle. This allows us to change the propellers thrust power while keeping a constant pedalling rhythm.

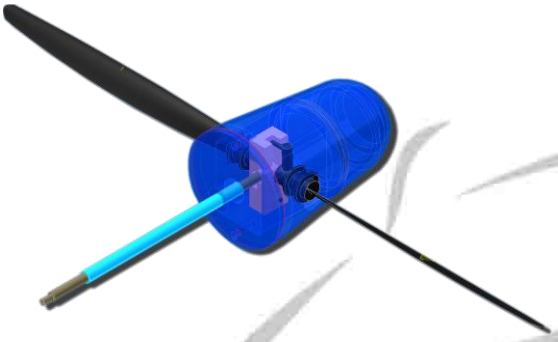

Fig. 42 Variable pitch cone and shaft

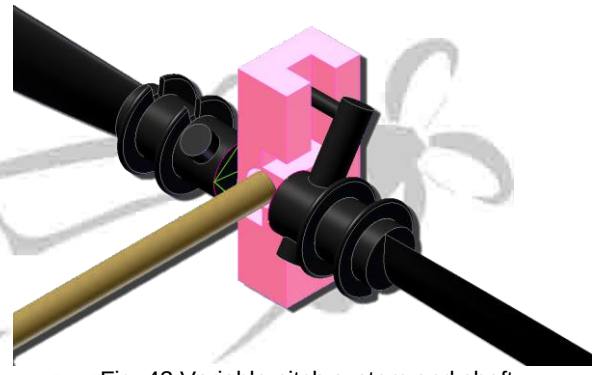

Fig. 43 Variable pitch system and shaft

The Propeller's housing or "cone" is a solid aluminium block. It has a rectangular hole where the variable pitch's block-arm set rests. It also features two symmetric holes where the blades are fixed.

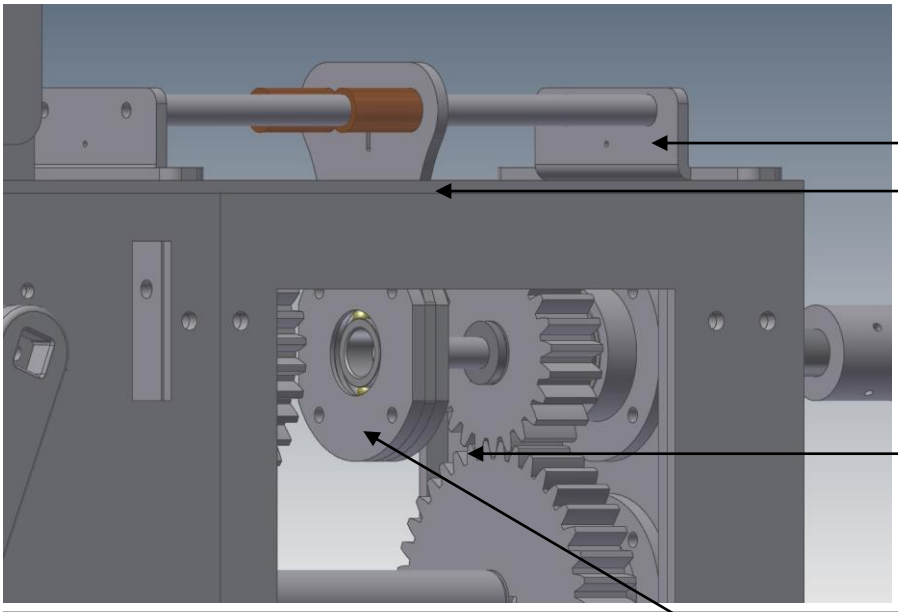

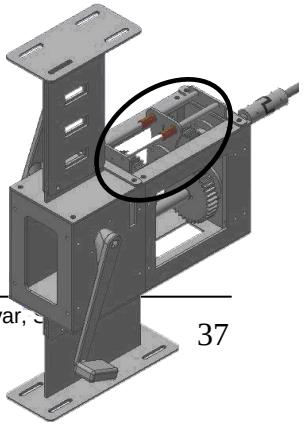

Fig. 44 Variable pitch system

The team decided to use the same variable pitch system as 2009's submarine. This was done because it was really never possible to properly test the system and evaluate its performance. However, changes were made to the variable pitch's changing mechanism.

As seen on figure 44, there is a vertical plate which moves with two rails. In the middle of the plate is a bearing that grabs the axial shaft that moves the pitch. This shaft rotates with the propeller. That's why a bearing is needed to allow a static structure to grab a rotating one. When the plate moves forward and backwards, the shaft also moves in the same way, changing the pitch.

FABRICATION

The manufacturing process of the variable pitch system or cone, rails, block-arm set and shaft was a manually wheel and drill operation while the vertical plate was performed through an abrasive water jet cutting directly on an aluminium plate.

2.3 ERGONOMICS

To study the best position for the pilot, the team used the same test bench as the past designed for PICUA I, where both pilots measured the position for pedalling the transmission system with the best comfort and force. The position is not a calculus, and was achieved through trial and error with this system that is not incorporated in the submarine. Figures 45 and 46 are the chest support for the submarine and the pilot position in the hull and figure 47 shows the test bench.

Fig. 45 Chest support

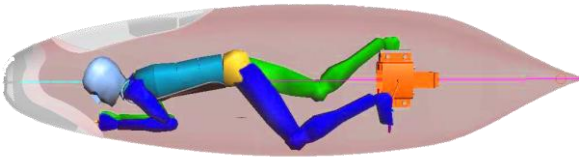

Fig. 46 Pilot position in the hull

Fig. 47 Test bench

2.4 MAIN AIR SUPPLY

The main air supply was located in the middle nose of the submarine under the chest support to balance the total weight and having the center of gravity as close as possible to the maximum width of the hull to make equilibrium with the center of flotation and avoid the rolling in the longitudinal axis.

3. CONTROL SYSTEMS

The main difference between PICUA I and PICUA II is the direction system. In 2009 the team installed an electrical steering system controlled by a joystick. The system fled with water in the first run at the ISR 10. This problem resulted in a four days run to change the entire directional system from electrical to mechanical.

For this submarine the team decided to install mechanical directional system o avoid any inconvenience with water. Also, it was meant to be as simple as possible to reduce maintenance time and to be able to fix any problem as fast as possible.

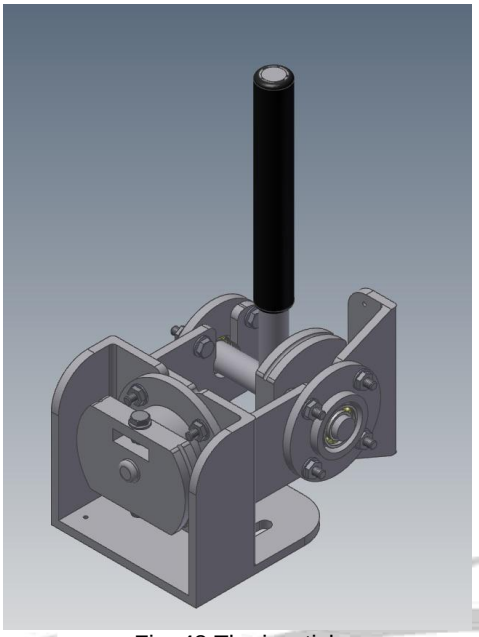

Fig. 48 The joystick

The directional system can be divided in two parts, the joystick and the fins. The joystick is a single handed stick which drives two pulleys in perpendicular planes (figure 48). One pulley controls the left to right steering, while the other pulley controls the up and down movement of the submarine. The pulleys are connected by bicycle wires to the fins pulleys (figure 49). This second being twice the size of the joystick ones. This difference in size allows a 2:1 reduction ratio of the rotation, giving the pilot more accuracy while driving.

The submarine has three directional fins. Two side by side which moves in the same direction and are connected by a solid shaft. To move the submarine left or right, there's a single fin in the top of the sub. Both fins use the same pulley type and size to steer.

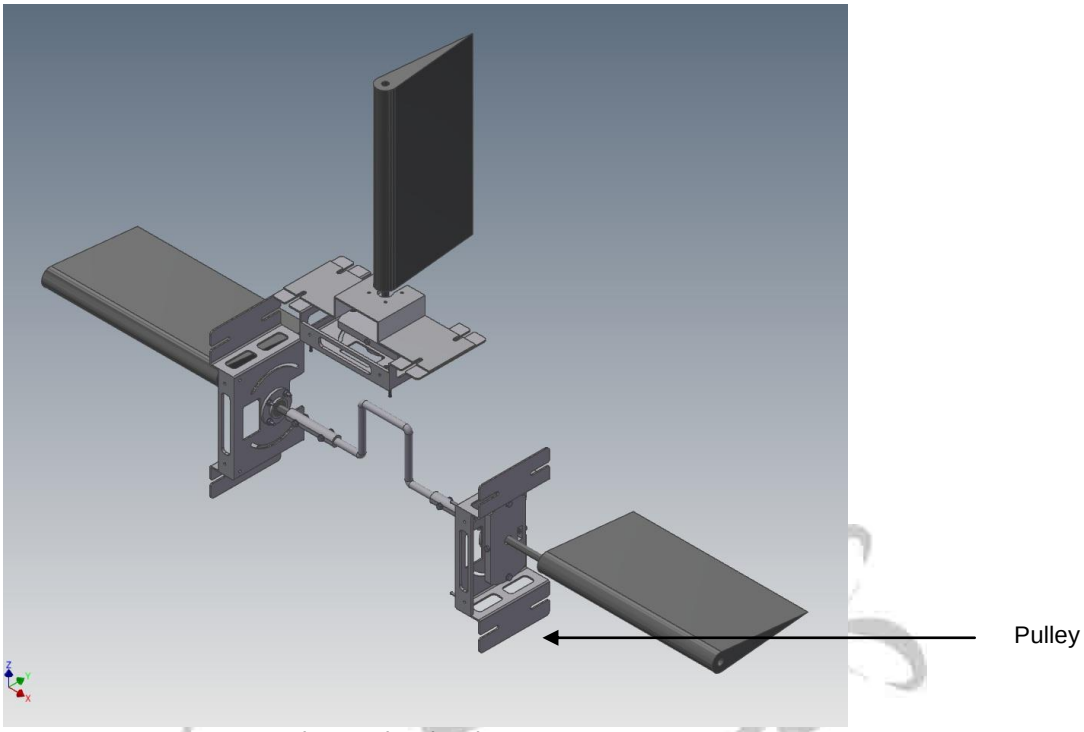

Fig. 49 Directional system

A detail of the fins steering mechanism (figure 50), shows a bolt attached to the pulley that goes through a canal in the aluminum support. A rubber band is installed between this bolt and the one in the corner to make the directional fin return to the neutral position once the pilot stops applying force to the joystick. This feature makes navigating the submarine easier by automatically making the submarine swim forward.

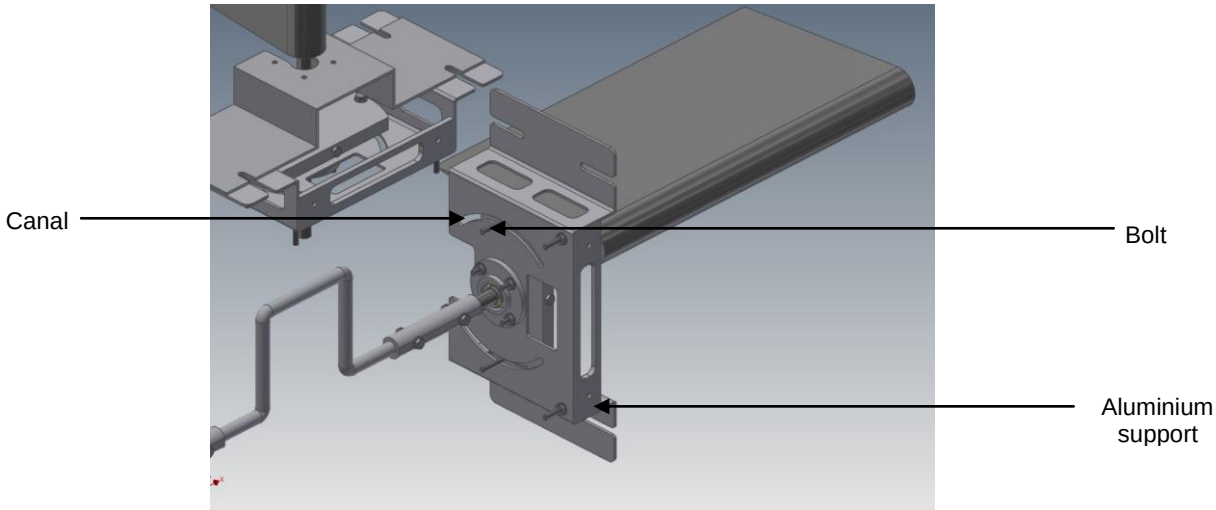

Fig. 50 Detailed view of the directional system

4. SAFETY AND LIFE SUPPORT

4.1 EMERGENCY POP-UP BUOY

DESIGN, FABRICATION

The emergency system designed and built for this submarine is the dead-man system. And is the same used at 2009's competition. This mechanism contains various pieces or items, some of the important one are: bicycle brake, reel, caliper and buoy.

The reel was built by the team, it consists of a shaft that passes through two aluminium slides; this shaft contains two roadblocks which make the shaft not be displaced in any direction. Its location is under the stabilizer fins.

The caliper is a predesigned mechanism whose primary function is to stop the radial motion of a shaft or disc. The caliper is used in car, motorbike and bicycle brakes.

To achieve an effective actioning of the dead-man system, the mechanism must follow a series of steps where: initially the brake is pressed, making the calliper compress or immobilize the disc that is welded to the reel shaft; at this time the buoy does not float to the surface. Once the break is released by the pilot, the caliper expands and the reel brake is free to rotate, making it unroll in radial form due to low density of the material in comparison with water, for this reason, it provides high positive buoyancy to the system without affecting the buoyancy of the submarine when it is released. Figure 51 shows the release mechanism.

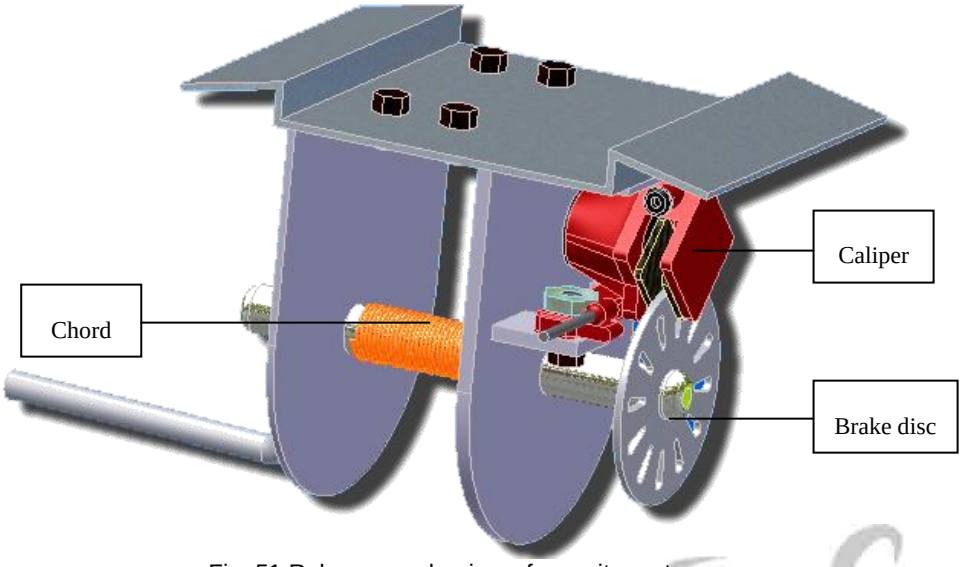

Fig. 51 Release mechanism of security system

4.2 STROBOSCOPIC LIGHT

The stroboscopic light is the same used on past competition and has the same location at the submarine. It is a bulb that is used by the divers in immersions at great depth. It emits flashes of light each second. It has a range in turbid waters of 33 ft. (see figure 52).

Fig. 52 Stroboscopic light

V. TECHNICAL SPECIFICATIONS

Name:	Picúa II
Category	One-person submarine propeller driven.
Length:	3000 mm
Maximum width (with fins):	1200 mm
Maximum width (without fins):	775 mm

Weight:	85 Kg
Volume:	0,895 m^3
Mass water displaced:	916,8 Kg
Total drag force:	152 N
Materials:	- Fiberglass. - Aluminium alloy. - Carbon steel. - Ultraleno. - Polycarbonate.
Pedals rotation speed:	60 RPM
Propeller rotation speed:	240 RPM
Transmission ratio:	1:4
Design speed:	6 knots
Safety systems:	- Stroboscopic light visible at 360º. - Dead man system with buoy.
Mechanical systems:	- Variable pitch. - Control system. - Propulsion system - Dead man system

VI. SPONSORSHIP LEVELS

Attract sponsors is one of the tasks of the Relations Assistants. For this purpose, a program was created and a classification by type of contribution by public and private enterprises that decided to help the

team in the project was drawn up and is described below:

BY PROGRAM

In this classification there were three forms to make a contribution:

- **L.O.C.T.I. (Ley Orgánica de Ciencia y Tecnología)**: private enterprises with an annual internal product major to US$ 21395,00; must donate an amount equal to 1% of its total net earnings in one year for the carrying out of scientific projects of diverse nature. It was done through payment by check into an account of the university.
- **Donation:** monetary resources that enterprises or contributors gave to the team through payment by check into our account.
- **Materials and/or advising**: based on the contribution of materials and technical advice for the construction of the submarine, which translates into the equivalent in our currency and later to the official dollar of CADIVI (Comisión de Administración de Divisas).

BY TYPE OF CONTRIBUTION

All enterprises were classified by the final amount of contribution and the program, in which bids advertising were offered to the enterprises that helped us and felt identified with the HPS-USB project. At this time, we don't offered visibility on the submarine. The sponsorship levels were the following (figure 53):

- **Platinum**
- **Gold**
- **Silver**
- **Bronze**

TYPE OF CONTRIBUTION IN US$ AND AMOUNT

	BRONZE	SILVER	GOLD	PLATINUM
L.O.C.T.I.	Under 7.000	13.400 and up	21.000 and up	27.900 and up
DONATION	Under 470	2.300 and up	4.650 and up	7.000 and up
MATERIALS AND/OR ADVISING	Under 420	1.400 and up	2.800 and up	4.700 and up

Fig. 63 Type of contribution in USD and amount

VII. TRAINING

The training was based basically in aerobics exercises as: trotting, spinning and swimming. The main idea of this training is to strengthen the legs to resist the force and fatigues generated by pedalling and control of breathing through oxygen regulators and so avoid cramps, pain and excessive tiredness or weakness in legs, to achieve many races as immersions at high speed.

VIII. COST BREAKDOWN

UNIVERSIDAD SIMÓN BOLÍVAR

HPS-USB 2011 BUDGET

ITEM	DESCRIPTION	PRICE (USD)
1	Divers training and rentals	2220
2	Tools	1120
3	Fiberglass hull and acrylic windows	986
4	Transmission system	2360
5	Chest support	200
6	Direction system	1180

7	Sanding, painting (appearance)	980
8	Submarine Air transportation	1500
9	Submarine box	580
10	Team trip to ISR 11 (flight, hotel, food, transportation, etc)	23255
	TOTAL	**34381**