ARCHIMEDE VI

Design Report

Report presented to:

International Submarine Races (ISR)
Judging and Directors Committee

Produced by:

Team Archimede
Ecole Polytechnique of Montreal

INTERNATIONAL SUBMARINE RACES

Monday June 24th, 2013

1 Preface

This document consists in a complete design review of the Ecole Polytechnique of Montreal's submarine Archimede VI. It has been written in order to give the judging and directors committee of the International Submarine Race detailed descriptions of every major and critical components of the submarine. Therefore, it contains full description of the work and analyses carried out during the design and manufacturing of the submarine. Every member of Archimede has worked hard to produce a detailed and illustrated report to clearly present every technical aspect of the vehicle and the decisions related to its conception.

Team Archimede hopes this document will demonstrate how every member have been devoted body and soul into designing and building Archimede VI during the past year in order to bring up a state of the art submarine that will once again challenge the limits set by its predecessor.

The whole team is looking forward to presenting its submarine and has great expectations regarding its performance. It will be a pleasure and a great pride to present the complete and final vehicle at the coming race on June 24th, 2013.

Team Archimede

2 Table of Contents

3 List of figures and tables

4 Introduction

Archimede is a technical society of the Ecole Polytechnique of Montreal regrouping a dozen students who have taken up the challenge to design and build the fastest human powered submarine. For nearly a decade, members of Archimede have pushed further and further the performance of their submarines optimizing their design concept, integrating the most recent advances in engineering and bringing more innovation into their design.

This year, for the International Submarine Race, Archimede is very proud to present **Archimede VI**. It will once again be competing in the one-person, propeller driven category. For this year's event, the team will present a whole new submarine built with state of the art materials, many new features and reviewed devices. With all these innovative ideas, we have high expectations regarding our ability to demonstrate the performance of Archimede VI.

The following pages will detail every aspects and components of Archimede VI by presenting their complete research and development process as well as the engineering concept involved in their creation that both led to a final product. This submarine has been built at the very best the team's capabilities and Archimede has high expectations for the next races. Particular attention was given to present an easily readable document. Therefore, the core of the text do not present the detailed calculations and analyses. However most of them are available in the Appendix.

5 Team organization

Archimede possesses its very own philosophy that defines the team and distinguishes it. The directorate's priority is to establish and maintain a team spirit that will guide everyone's action and involvement throughout the year.

The project is entirely run by undergraduate students from many field of engineering offered at Polytechnique. It is important to mention that our work is extracurricular and that no teacher is directly involved in our actions to manage the development of the project. Thus, to ensure the sustainability of our activities, our team is deploying great efforts in recruitment and promotion for the society to acquire new talents every year.

To maintain the team spirit, it is crucial that each of our members feels personally involved in the full development of the submarine. We strongly encourage student implication through the completion of their compulsory final academic projects. In this sense, our effectives have been distributed according to everyone's abilities so that every components of the submarine could be developed simultaneously during the year. Their work has been divided into five categories: the hull, the propulsion system, the direction system, the fins and the portholes.

The directorate of Archimede is composed of three members who are taking charge of every administrative task: a general director responsible of the overall administration, a treasurer in charge of the accounts, and a marketing director in charge of dealing with the sponsors and promoting events.

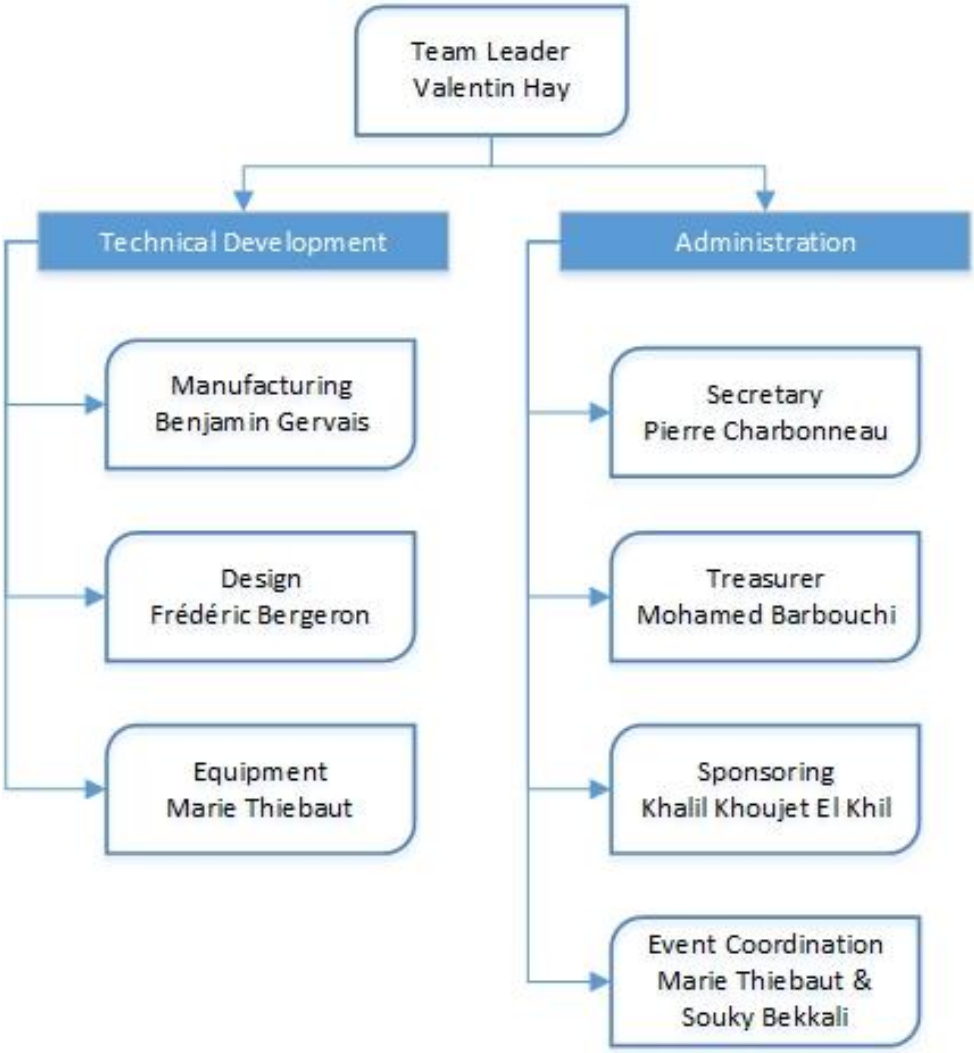

Figure 1: Organization chart of Archimede (2012-2013)

6 Archimede VI Operation and specifications

6.1 TRIM

The submarine is trimmed by adding weight at the front or at the rear of the submarine. Foam can also be added is case of negative buoyancy. Velcro is used to secure the weight inside the submarine.

6.2 NAVIGATION

The pilot controls all the movements of the submarine. Depth control is done visually by looking at the bottom of the pool.

6.3 STOPPING

Stopping the submarine is done by reversing the rotation of the propeller. Fins can also be used for hard maneuvers by positioning them perpendicular to the flow hence acting as a brake.

6.4 SPECIFICATIONS

The specifications shown in table 1 where either directly measured on the submarine or obtained from the CATIAV5® model. The weight was calculated from measurement. Since the submarine is trimmed to be neutrally buoyant and to stay horizontal with the pilot inside, the center of buoyancy acts exactly on the center of gravity of the wet submarine.

Table 1: Submarine specifications

General	
Overall Length	131,5 in / 3340 mm
Hull max diameter	28,5 / 723 mm
Inside Volume	20,34 ft^3 / 0,576 m^3
Dry weight (including air tank)	200 lbs / 90,72 kg
Propulsion	
Technology	Single-propeller
Propeller optimal speed	950 rpm
Number of blades	2
Performance	
Design speed	7,1 kts / 3,65 m/s
Fins	
Profile Reference	NACA0010
Number of fins	4
Reference Area	75,95 in^2 / 0,049 m^2
Gearbox	
Design Cadence	80 rpm
Maximum Speed ratio	13
Steering system	Mechanical

7 Hull

7.1 DESIGN AND SHAPE

To develop a new generation of Archimede, the team organizer decided to improve the characteristics of Archimede V. The new design of Archimede VI mainly consists in an optimization of the last submarine's profile. In order to reduce drag on the hull to obtain more speed and provide an improved installation configuration for the pilot, the hull shape was redesigned. The main dimensions of new hull are as follow:

Table 2: Hull's dimensions

Length	3302 mm / 130 in
Height	723 mm / 28,5 in

As a result, the total width of the submarine decreased and the length slightly increased. The side profile of new hull presented in the following figure.

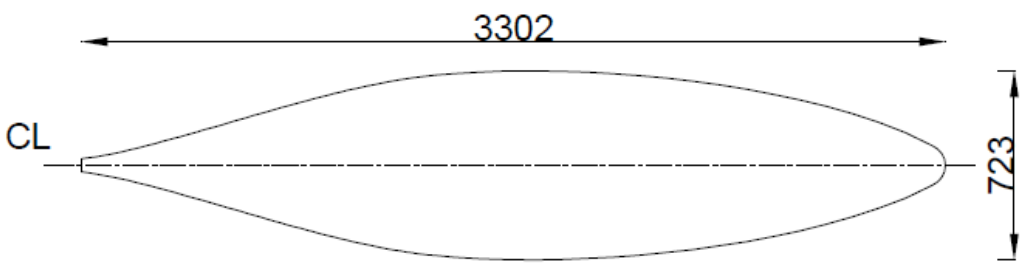

Figure 2: Side profile of the submarine (Archimede VI)

The actual shape of the submarine was the result of a multitude of computational fluid dynamic analysis using Ansys Fluent®.

As we mentioned earlier, the most important reason to change the submarine's hull profile was to achieve a highest speed in competition. A general drag calculation showed the following result :

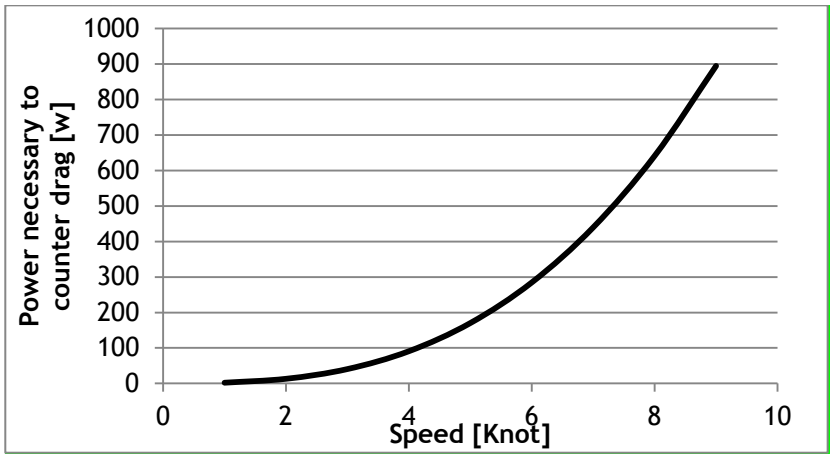

Figure 3: Power-speed diagram

The figure shows that the curve is not linear. To obtain a speed of 7 knots (3.6 m/s) the required power is 450 N and for a speed of 8 knots (4.1 m/s) the required power is about 650 N. This result was used as an input for the propeller design verification.

7.2 MATERIALS

Archimede VI is made of a sandwich composite hull. This means that a lightweight material was used in the center of the hull to separates the inside fiberglass layers from the outside fiberglass layers. This material is Corecell A-Foam; a foam specialized for sub-sea applications (as shown in figure 1). This was intended to add buoyancy to the submarine, to increase its strength perpendicular to the surface of the hull and to add resistance to bending stress.

Figure 4 : Corecell

The composite layers used in the hull are the following, from the outside to the inside of the submarine:

- Wax finish
- 2 layers of paint
- 2 layers of gel coat
- Water resistant putty
- 1 coat of mat fiberglass fabric with epoxy resin
- 1 coat of bidirectional fiberglass fabric with epoxy resin
- 1 coat of bidirectional Kevlar fabric in the nose for additional resistance
- 1 coat of mat fiberglass fabric with epoxy resin
- Corecell with epoxy resin, light weighted with glass microspheres
- 2 coats of mat fiberglass fabric with epoxy resin
- Paste of epoxy resin with glass microspheres for inside texture
- 2 layers of gel coat

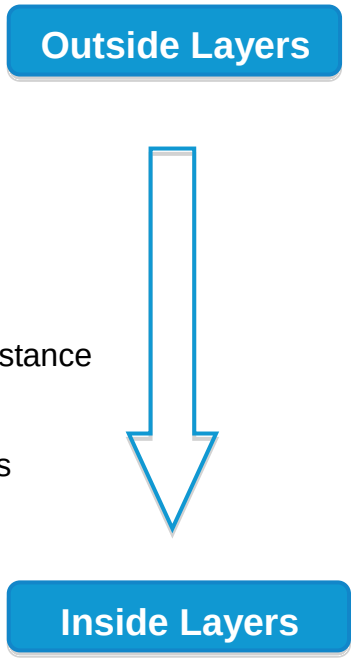

7.3 FABRICATION

Fabrication started with a first prototype made out of foam and machined on a 5-axe milling. After sanding up the plug, it was covered by a 10-ounces bidirectional cloth for more homogeneity of the surface. The mold was then layered up on the foam model, using fiberglass. The composite layers in sandwich mentioned above were deposited on the inner surface of this mold.

This way, two half hull were fabricated and then joined together using smaller pieces of corecell and additional fiberglass reinforcement. Care and precision were crucial to make sure the two pieces fitted perfectly. Water resistant putty was used in order to conserve tangency and curvature continuity between the two half, all around the submarine. Reinforcements were also added inside the rear end of the submarine.

7.4 ANALYSIS OF FORCE DISSIPATION

Since the type of composite layers in sandwich used for the fabrication of the hull is not a standard material FEM software, its properties had to be determined experimentally. A sample of the hull was produced using the same procedures as for the hull. This sample was subsequently subjected to bending moments and strain forces. An example of these tests is illustrated in figure 2. The resulting deformations allowed us to compute desired properties. These properties are listed in table 1.

Figure 5 : Bending test performed on Corecell S-Foam

Table 3: Mechanical properties of the sandwich material

Corecell™ A-500 (SAN foam)	
Thickness	9.5 mm
Young's modulus	81 MPa
Shear modulus	26 MPa
Layer of fiberglass	
Cured thickness	0.5 mm
Longitudinal Young's modulus	72 GPa
Longitudinal shear modulus	33 GPa

The same sample was also modeled in Catia using the Composite Design workbench and a finite element analysis was performed on the sample. This test was performed to validate the finite analysis model.

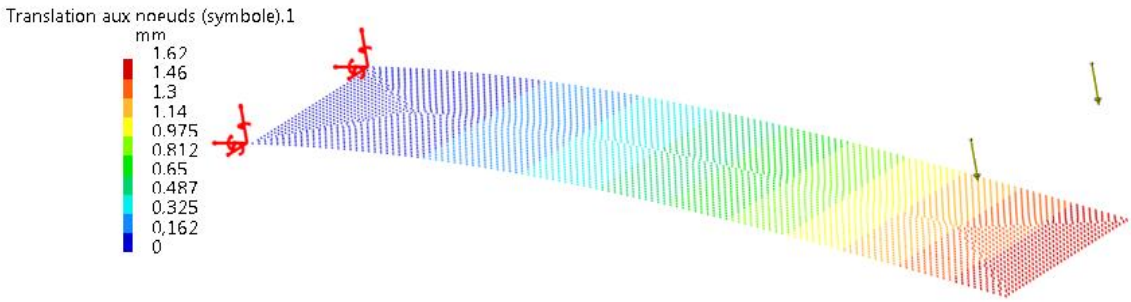

Figure 6 : Deformation results on Corecell sample analysis

Once the model was validated, a finite element analysis of the complete hull could be performed, by applying the forces transferred to the hull by the propulsion system. More details on these forces will be given in chapter 8. The next figure illustrates the results of the deformation analysis.

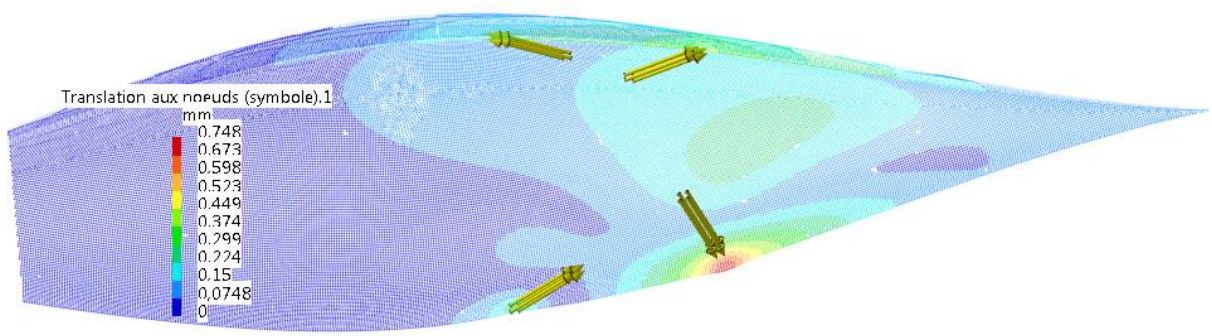

Figure 7 : Finite element analysis on the hull

The finite element analysis of hull predicted a maximal deformation of 0.748 mm. This distortion is minimal and thus will not cause any problem when using the submarine and pedaling at high speed.

8 Cockpit

In order to maximise the visibility of the pilot, the nose of the hull consists in a dome-shaped PMMA window manufactured to match the submarine's outline. Compared to the smaller side windows used in previous designs, this upgrade enables the pilot to capture more information on his surroundings and whereabouts. By facilitating the perception of the course indicators and the submarine's trajectory, this window should help the pilot to adjust its steering, resulting in an improved overall performance. This complex dome-shape has been manufactured using a vacuum thermoforming process. The main steps followed are:

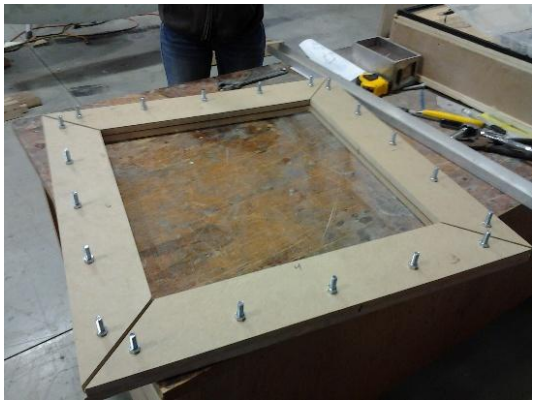

Figure 8: Cockpit - Step 1

Figure 9: Cockpit Step 2

1. A PMMA plastic sheet is bolted into a custom frame. It is then heated to a temperature between 160 to 170°C in a specific oven. This ensures to obtain a uniform temperature throughout the surface, in opposition to a radiant heating. Uniformity is critical to ensure an even deformation of the material.

2. The mold is fixed to a vacuum box. The frame holding the sheet and this box have been dimensioned to seal together. This will force the softened PMMA onto the mold by removing the air from the cavities.

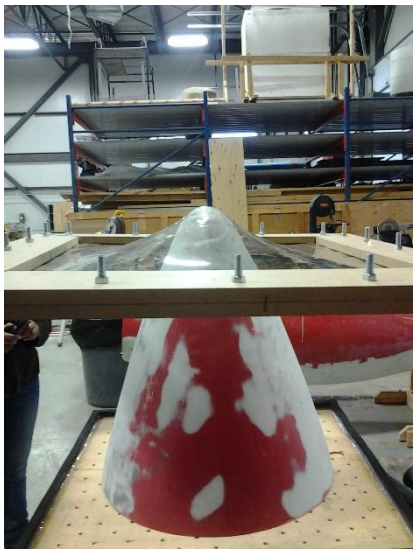

Figure 10: Cockpit- Step 3

3. The heated PMMA sheet is then pressed onto the mold and stretched until the seal is obtained between the frame and the vacuum box. The desired shape is obtained once the material has cooled down and been removed from the mold.

After trimming the window's edges to their desired dimensions, it is then joined to the hull using a special fixation system. In order to stiffen the mating edge, aluminium discs are used as fittings to insure alignment of the nose. Latches are fixed to the nose to tighten it in place onto the hull. This system allows changing the window if needed, after a crash for instance.

9 Fins

The fins are essential to allow the pilot to control the sub trajectory. Archimede VI has four fins: two lateral fins to control vertical motion and two others over and under the hull to control lateral movements. They were designed using the NACA0010 profile, very thin in order to minimize drag, without compromising their mechanical properties. Furthermore, given the cable mechanism used for the direction system, the surface of the mobile part of the fin had to be small enough for being activated manually by the pilot while pedaling without too much effort. The fins design has been largely reviewed for Archimede VI. The reasons and methodology that led to the new development will be detailed in this part of the report.

9.1 FINS'S REDESIGN REQUIREMENTS

The former version of Archimede was also equipped with 4 fins respectively placed to trim and control the submarine pitch and yaw axis. The design proved itself reliable but quite insufficient in terms of maneuverability. Also and more importantly the fins were identified as the submarine weak point in terms of structural strength. Experience shows that these parts are more likely to be damaged during handling, transportation and operation than any other part of the submarine. In the former design, the 4 parts were directly attached to the hull. In case of damage, the time needed to replace the fins was extensively long (24 hours) and potential damage to the hull could occur during the process. The decision was made to redesign the fin and cope with both the increase in maneuverability and the improvement in submarine/fins connections. The figures below present both former and new version of the fins' design:

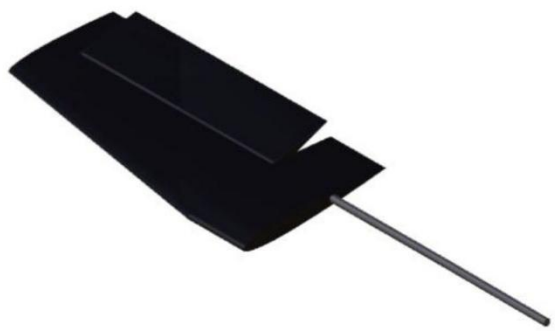

Figure 11: Archimede V Fins (CAD model)

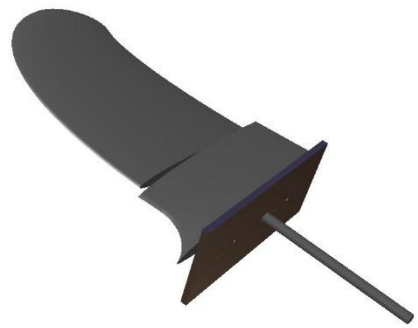

Figure 12: Archimede VI Fins (CAD model)

9.2 DESIGN AND SHAPE

9.2.1 Profile

The fin's profile conforms to a NACA profile. NACA profiles are amongst the most trustful in aviation, and can thereby be used with confidence in hydrodynamics. The choice of a NACA0010 airfoil model was made making a compromise between its thinness and its solidity.

9.2.2 Size

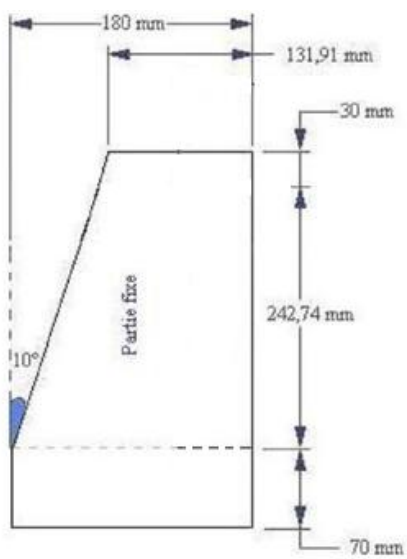

Figure 13 : Fins' dimensions

Although the general shape of the fins was refined for Archimede VI, the sizing was based on a standard representation shown on figure 8.

Calculations were carried out to ensure a sufficient amount of maneuverability and trim. For this 2013 edition the race path is essentially a straight line. Maneuvers requirements are consequently quite low. But the fins were redesigned in the prospects to carry out other type of missions where these criteria could become critical.

Refinement on the leading edge design was carried out and the potentialities of the utilization of an elliptical shape was

analyzed by CFD and showed that his shape further reduce the amount of turbulence created by the fins near the propeller.

9.2.3 Connections

Different connection types were considered. A focus has been made on benchmarking ideas from nautical sport equipment. The challenge was to produce a system resistant enough to support the effort on the fins and flexible enough to break before damaging the hull. The system is still in development as we speak.

The extremity of the fin is clearly the part more exposed to potential damages. This part is not completely mobile and can be changed without any action on the bottom part fixed to the hull. The next stage, currently in development, will be to develop a mechanical breaker to disconnect in case of large loads the truss holding the fin to avoid damaging the hull. Different solutions are currently analyzed including the utilization of magnets.

9.3 MATERIALS AND MANUFACTURING

New materials and manufacturing processes were used for the fins of Archimede VI. The manufacturing design was made using experience from previous submarines and new analyses.

The fins of Archimede V were made out of a composite sandwich structure, with external surface made from carbon fiber and internal core from epoxy. They were pretty solid but they were very long to make and during the competition, the time needed to replace a damaged fin was too long, as previously exposed.

The new fins use an innovative composite concept: aluminum for the rods, plastics for the main parts of the fins and fiberglass for the connection with the hull.

The plastic manufacturing of the fins is made by two silicon half-mold, joined together during the plastic curing to make a homogeneous plastic part. Those molds were initially made by pouring liquid silicon over halves of fins manufactured in aluminum by an external company.

Finally, it is important to note that replacement of fins during the competition will be faster and easier since only the mobile part will be changed, without any epoxy curing or bonding.

10Drivetrain

10.1 DESCRIPTION

The propulsion system consists of a drivetrain and it's supporting structure. The main function of the gearbox is to transfer the power from the pilot to the propeller. It is a two stages gearbox with a bevel gear to transfer the rotation of the first stage shaft to the perpendicular rotational axis of the propeller. A bicycle crank is used as an interface between the drivetrain and the pilot. The structure supports the different elements of the drive train and provides a way to adjust the position of the bicycle crank to suit the pilot needs. Figure 12 shows the bicycle crank used in the submarine. Archimede VI gearbox is based on the previous design. The parts presenting defaults and misconception identified on Archimede V have been redesigned. A long-term project is currently carried out to make the gear box waterproof.

Once the specifications of the propeller were known, design began on a system that would transfer the power from the pilot to the propeller. Different transmission systems were considered at first, but a combination of chain and gears was considered to be the obvious choice. Chain and gears are extremely efficient ways of transferring power.

A chain drive was selected for the first stage of the drive train for simplicity and effectiveness, the shelf bicycle cranks being already equipped with adapted sprockets on them. A chain drive also allows to easily change the gear ratio, can accommodate change in sprocket distance and is a good compromise in terms of reliability against price.

10.2 DESIGN OF THE GEARBOX

10.2.1 Cadence and gear ratio requirements

To determine the overall gear ratio, a cadence of 80 rpm for the bicycle crank was chosen. This cadence was chosen as the best compromise between the pilot comfort and the necessity to limit the torque applied on the transmission structural elements. Benchmarking on bicycle trends showed 80 rpm corresponds to the typical cadence of recreational and racing cyclists. A higher overall gear ratio would mean a lower cadence and more torque, which mean more stress on the supporting structure. A lower overall gear ratio would mean a higher cadence and less torque, but this also mean a less comfortable cadence for the pilot. Since the propeller has an optimal speed of 950 rpm and with the desired cadence of 80 rpm, an overall gear ratio of 1:12 was required. With the bicycle crank it is not possible to get such high ratio from only a single chain reduction. Knowing that a single chain reduction would not work, the team started to look at two stages and tree stages reduction systems using gears.

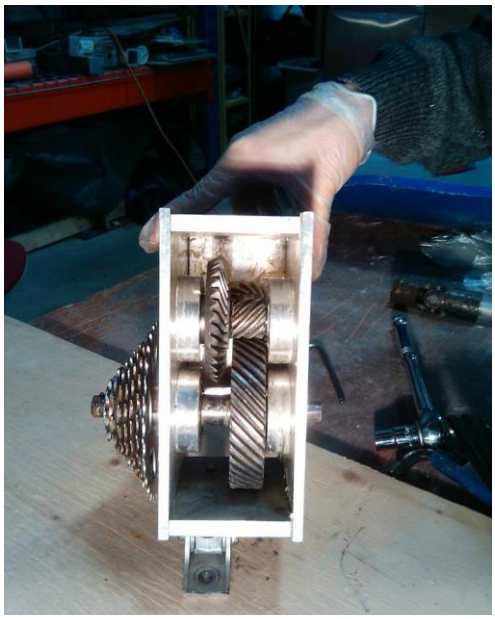

Figure 14: Gearbox

The gears needed to be selected such that they would withstand the torque produced by the pilot but present the minimal volume and weight. The design case in terms of loading used in the gear selection process corresponds to the maximum torque applied by the pilot: it was considered to be the worst case scenario. Benchmarking from a world cup bicycle competition was used to determine the maximal torque and force produced by the pilot. In the end, the pilot was assumed to be producing 870 N of force at a speed of 80 rpm. This force on a 175 mm bicycle crank corresponds to 150 Nm of torque.

10.2.2 Transmission design

Whit these figures in mind, the analysis of the products offered by gear manufacturers led the team to select a three-stage gear system. The second stage consists of two helical gears giving a ratio of 4:1 and the third stage consist of two helical bevel gears giving a ratio of 2:1.

The use of bicycle components on the first stage of the drivetrain gave the ability to slightly alter the gear ratio to suit the pilot's needs.

Table 4 : Gear ratio

	Input (pilot)	Output (propeller)
Speed	80 RPM	960 RPM
Torque	150 Nm	12.5 NM
Overall ratio	1:12	

10.2.3 Modifications and improvements

Last competition revealed a fitting problem between the bike cassette and the first stage shaft. The cassette, although press fitted on the stage, was turning freely. The problem was identified as a material compatibility problem: indeed the shaft, in steel, damaged the inside of the aluminium sprocket, creating clearance between the parts. Both parts are now in made steel and the tolerance has been adjusted for a perfect fit. All bearings have been changed to lessen the friction.

10.2.4 Long-term projects

Among the many projects that run continuously in the team, one in particular shows high potential for the improvement of the submarine overall performance. The team is currently working on the design of a watertight casing. Although the system will not be ready for the ISR competition, this achievement will permit the utilization of oil as a lubricant instead of water. The latter solution, although greatly simplifying the design is not optimal in terms of friction.
A new drivetrain is also in study to replace the sprocket/chain system by a fully geared system. This implies to redesign the gear box to achieve bigger ratios. The efficiency of such a system would be greatly increased, gears overall efficiency being 3% higher that a chain drive.

10.3 MOUNTING STRUCTURE OF THE GEARBOX

The gearbox is mounted on an adjustable structure capable of accommodating pilots of every height. The illustrations in the figure 13 below present the final design of the structure. On this concept, the crank can be adjusted over a range of 7.5 inches. It both allows the pilot to adjust the position of the crank to his needs and to set the tension in the chain. Four aluminum plate embedded in the hull are used to mount the structure. A reinforcement bar between the crank and the gearbox bar was added to the assembly. Its purpose is to absorb the majority of the forces generated by the pilot when pedaling. Without this bar, the crank assembly worked primarily in bending and excessive stress was observed. A more detailed FEM analysis is available in Appendix.

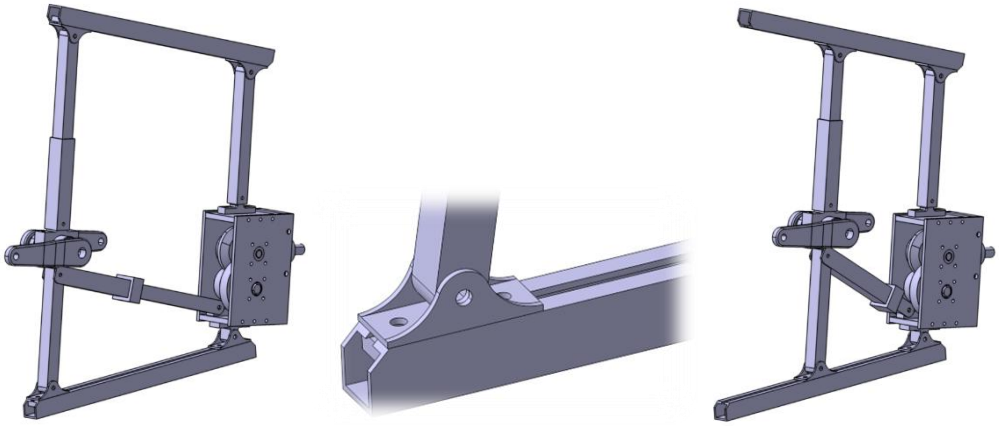

Figure 15 : Gearbox' mounting structure

10.4 THE TRANSMISSION

The transmission is composed of a multitude of parts. The structure comprises five aluminum plates and a support for the reinforcing bar. Figure 14 shows the transmission assembly. Inside the gearbox, the transmission has four gears, three shafts and six ball bearings. The input shaft of the transmission includes a part that can accommodate a bicycle cassette.

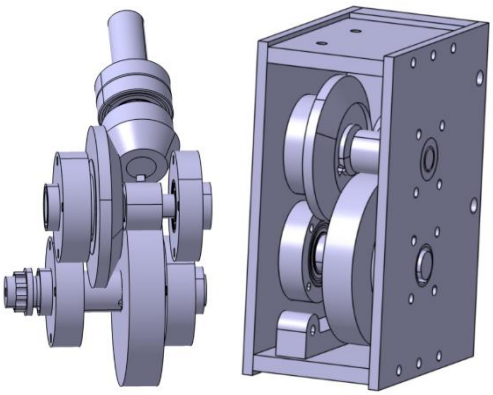

Figure 16 : Gearbox assembly

10.5 ERGONOMIC ANALYSIS

As space is extremely limited in the submarine, the propulsion system must be as small as possible. In addition, the pilot must have sufficient room to operate the propulsion system without difficulty. Therefore, the Human Builder Workbench in Catia was used to conduct an ergonomic analysis. The figure 15 presents the pilot with the cranks in horizontal position while the next one presents the crank in vertical position.

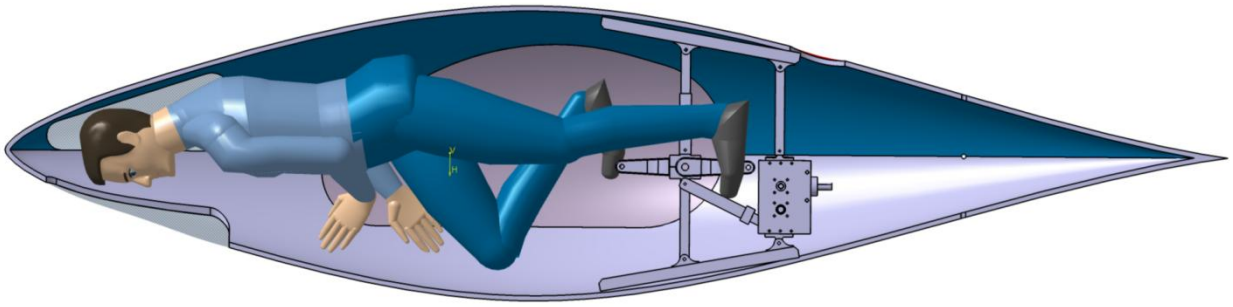

Figure 17 : Ergonomic analysis with horizontal crank

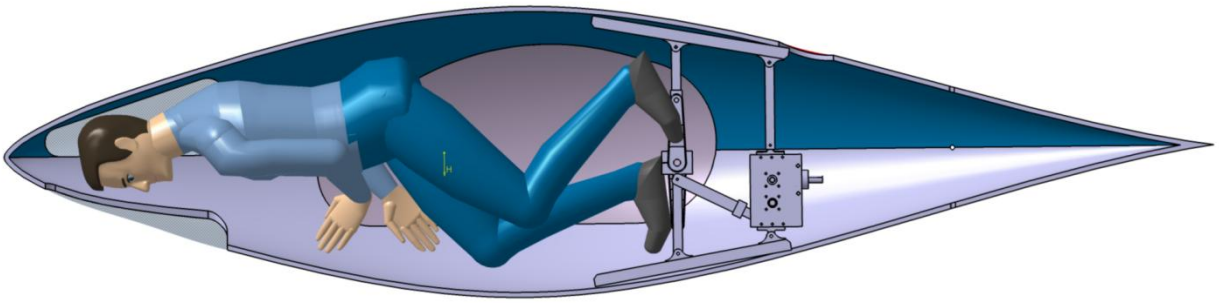

Figure 18 : Ergonomic analysis with vertical crank

11 Propeller

Archimede VI will be using the same propeller as its predecessor. It is a dual blade stainless steel propeller specifically designed for an underwater vehicle such as Archimede. Its optimal rotating speed is 950 RPM. As shown on figure 20, this propeller will be consigned in a shroud whose dimensions respect a standard profile. This shroud ensures a drag reduction by guiding water flows around the propeller. It increases a lot the propeller's efficiency at lower speeds. The thrust produced by the propeller is transferred directly to the rear of the hull through a ball bearing and the tubular structure shown in figure 20.

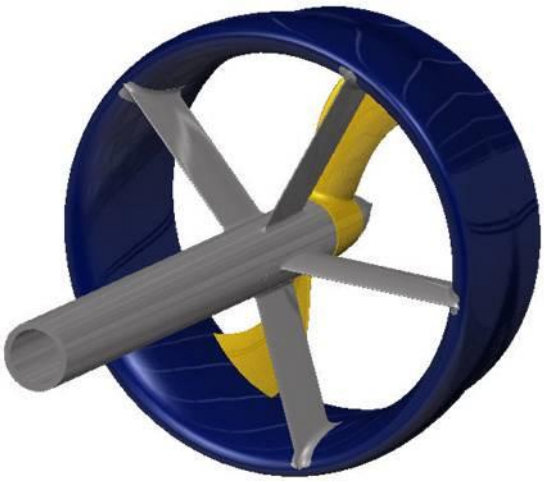

Figure 19 : 3D model of propeller and shroud

11.1 DESIGN OF THE PROPELLER

The main objective of the design method was to ensure maximum efficiency for a given power. This power comes from the torque given to the main shaft by the pilot, with the help of the drivetrain system to increase the rotational speed.

Thus, a minimal number of blades on the propeller was chosen to maximize the propeller efficiency, even though it would induce more vibrations on the main shaft and the hull. In fact, fluid dynamic laws show that a lower number of blades mean an increased diameter of the propeller, which leads to higher Reynolds number for the fluid flow around the tips of the blade. The drag coefficient of the blades is then reduced, so the propeller's efficiency is increased. Furthermore, a lower value for the area ratio of the blades (BAR ratio) was chosen to support the same principle.

The blades were designed using standard dimensions established by the Kaplan propeller model. This type of propeller was specially designed to fit an appropriate nozzle, which will be discussed later. A skew distribution was then applied to the central guideline of the blades in order to add a little angular deviation along the radial axis of the blades. This skew distribution was chosen to have an opposite effect on the induced vibrations described previously. This effect is created by the angular gap that the skew gives between the root and the tip of the blades. It has even more effects when the propeller is used in an inhomogeneous wake field like the environments where the submarine will progress. The final computer modeling is given in figure 21.

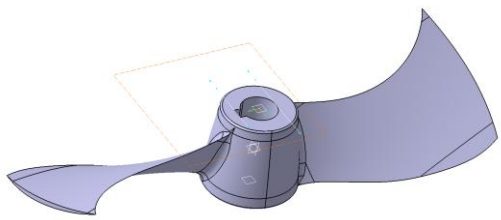

Figure 20 : Computer modeling of the propeller

Finally, the reverse engineering process was applied to the propeller to ensure the respect of the machining tolerance and to digitally measure the surfaces dimensional variations between the theoretical model and the built propeller. The figure 22 presents the results of the scan of the final piece by using the Handyscan laser scanner device, from Creaform. The white dots represent the keypoints used by the laser for positioning the propeller's surfaces in space.

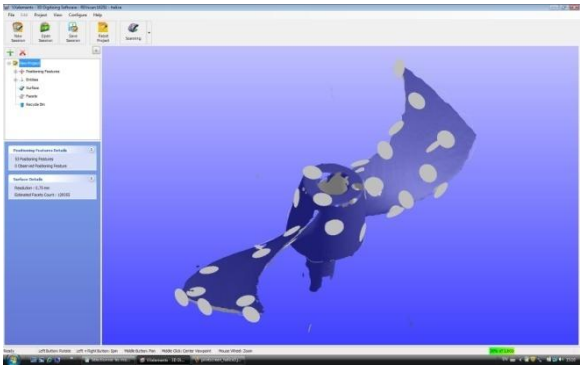

Figure 21 : Dimension scan results obtained with a Handyscan

11.2 PROPELLER'S SHROUD

The propeller's shroud was designed by using a MARINE standard profile. It was chosen to fit the Kaplan propeller discussed previously. Its inner diameter allows minimum clearance between its surface and the tips of the blades in order to reduce energy losses from tips vortices. The final modeling made with CATIAV5® is represented at figure 23. The same reverse engineering process described for the propeller was applied for the shroud. The figure 24, illustrates the scanning in progress.

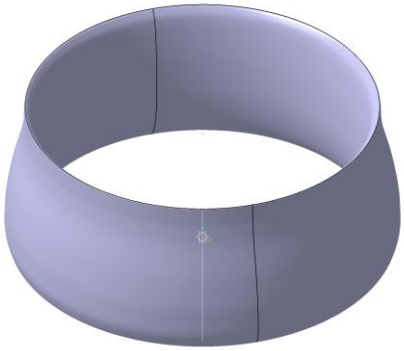

Figure 22 : Computer modeling of the shroud

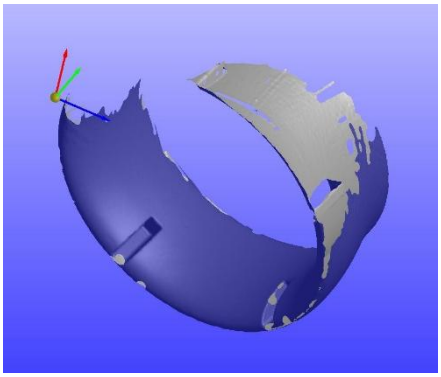

Figure 23 : Dimension control scan in progress on the shroud

11.3 THE SHROUD'S FINS

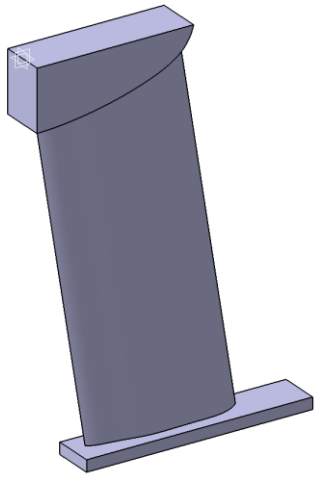

Figure 24 : Computer modeling of a shroud fin

The shroud is supported by five fixed fins connected to the stainless steel tube at the submarine's hull ending such as illustrated by the figure 20. Their final computer modeling using CATIAV5® is illustrated in figure 25. These fins were designed in accordance with the standards of a NACA profile to ensure maximum efficiency and minimum drag. They deserve particular attention because they are designed to give the water flow a rotational momentum before it reaches the propeller. This effect is crucial because it is aimed to cancel the inevitable momentum given by the propeller's rotation. It results in a reduced momentum that has negligible effects on the submarine. Furthermore, it gives another gain in the propeller's efficiency while supporting the shroud and transferring the forces and constraints created by the propeller to the hull.

11.4 PROPELLER VERIFICATION FOR ARCHIMEDE VI

Because the Archimede's hull form was changed and we have to use the same propeller as its predecessor, verification steps were carried out to verify the capacity of propeller to produce sufficient power. We use the B-series method which is widely used in the preliminary design of light or moderately loaded marine propellers. The input principal data are as follow:

- Diameter: 0.4 m
- No. of blade: 2
- Water density: 1000 kg/m3
- RPM (Number of rotation per minute): 600-900

The analyses by B-series method shows that, the existing propeller is suitable to use in Archimedes 6. This propeller is able to produce enough thrust to obtain the speed of 8 knots.

12 Steering System

12.1 DESCRIPTION

Maneuver requirements are not crucial for this competition as the race path is essentially a straight line. The steering system was largely redesigned to fit with the new fins. The concept, however, remains similar to Archimede V. The system allows the submarine to rotate around its pitch and yaw axis. Control of the roll movement is not possible, so balance of the submarine about this axis is mandatory.

The system is entirely mechanical, and therefore easy to adjust or repair. It is designed to allow full control of the submarine only one hand. The four fins associated with the pitch and yaw axes are linked to the pilot's joystick with a succession of cables and pulleys. The joystick movements will induce maximum fins deflexion of ±90°. Because the pilot will lie with the joystick under his torso, the end of the joystick is topped with a ball, to prevent pilot's injuries in the event of an impact.

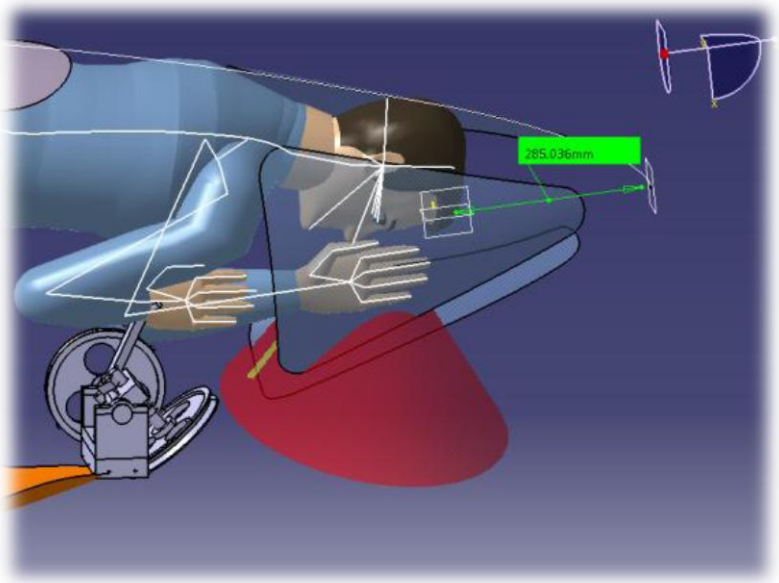

Figure 25 : Manikin simulation on steering system

The joystick is composed of two wheels of 10 cm in diameter. It is shown in figure 27. The side wheel controls the vertical direction, while the top wheel controls the horizontal motion. These pulleys are linked to cables attached to the fins.

For each direction, the cables act on a pulley located on one of the two fins per axis. A metal rod is used to link the two opposite fins. On the figure 28, the two vertical fins are linked together. Also shown is the pulley.

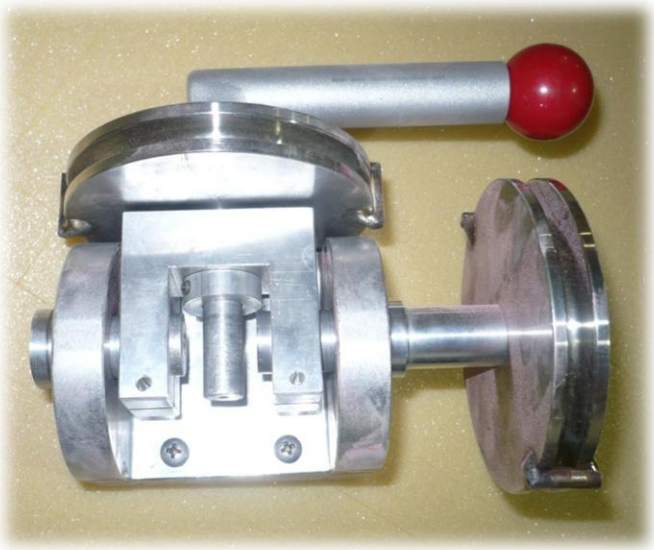

Figure 26 : Joystick of the steering system

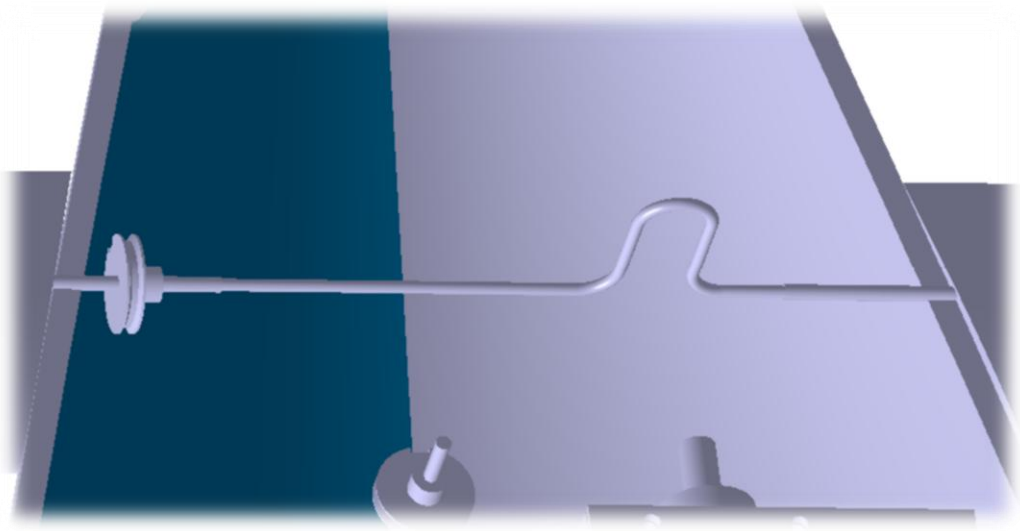

Figure 27 : Metal rod linked to the vertical fins

13 Sonar

13.1 PROJECT AND FUTURE DEVELOPMENT

Given the reduced visibility from the submarine cockpit and the weak ambient lightning, it is often difficult for the pilot to evaluate distances properly (especially in the lateral directions, where there is no porthole). In order to assist the pilot, our team, in collaboration with another technical society, "Poly Project", chose to design a triaxial active sonar. This device is able to display distances from near obstacles onto a small LCD screen, for the left, right and bottom directions.

It operates the following way: three speakers emit periodically 1000Hz sound pulses that propagate through water and are reflected on the obstacles. The echoes are then received by three microphones. The order in which they are received determinates the position of the obstacle (left, right or bottom), while the time delay allows us to calculate its distance (assuming a speed of sound of 1497 m/s in water). It is then possible to modify the deviation of the submarine, using the rudders and fins. (See Figure 26)

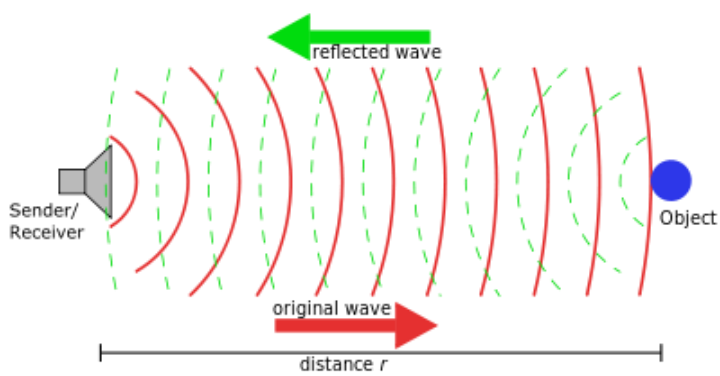

Figure 28: Active sonar principle

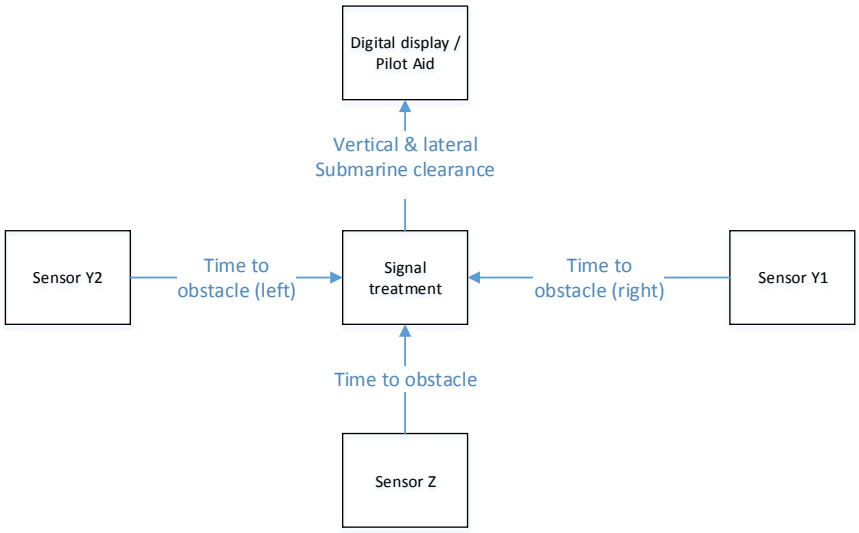

Figure 29 : Archimede VI Sonar Principle

Until now Archimede has always been a fully mechanical submarine. The addition of the sonar is a good opportunity to introduce for the first time electronic equipment in Archimede VI. Future studies will follow to evaluate the possibility to automatically control the fins and maintain a fixed distance from the basin walls.

13.2 COMPONENTS

- Our sonar is operated by a "Cypress PsoC 5", a Programmable System on Chip (Figure 30). This board includes many input and output digital ports, which are used to plug the microphones and the speakers. It also features a small LCD, in order to display the 3 sonars readings in meters.
- Each microphone is connected to a custom PCB (Figure 30). These PCB contain an analog to digital circuit that converts the microphone tension to a digital signal that can be processed by the Cypress board.
- Each speaker is connected to an op-amp and to a 3.3 V battery. This way, they can be activated by a digital signal and are autonomously powered.

Each component is enclosed in a watertight epoxy case, to keep them dry. The Cypress board case is screwed in the cockpit, with the display at sight for the pilot. As for the microphones

and the speakers, they are screwed at the exterior of the submarine, on the left, right and bottom side.

Figure 30: Cypress PsoC 5

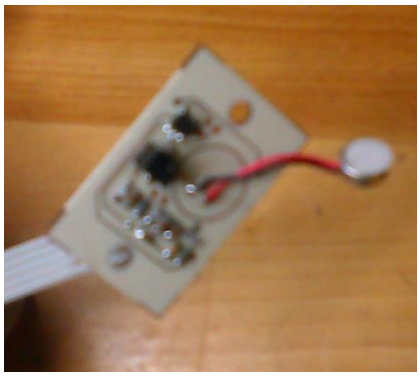

Figure 31: Microphone soldered to its analog-to-digital converter circuit

14Safety Requirements

14.1 SAFETY EQUIPMENT LOCATION

Figure 32 shows the location of all safety systems.

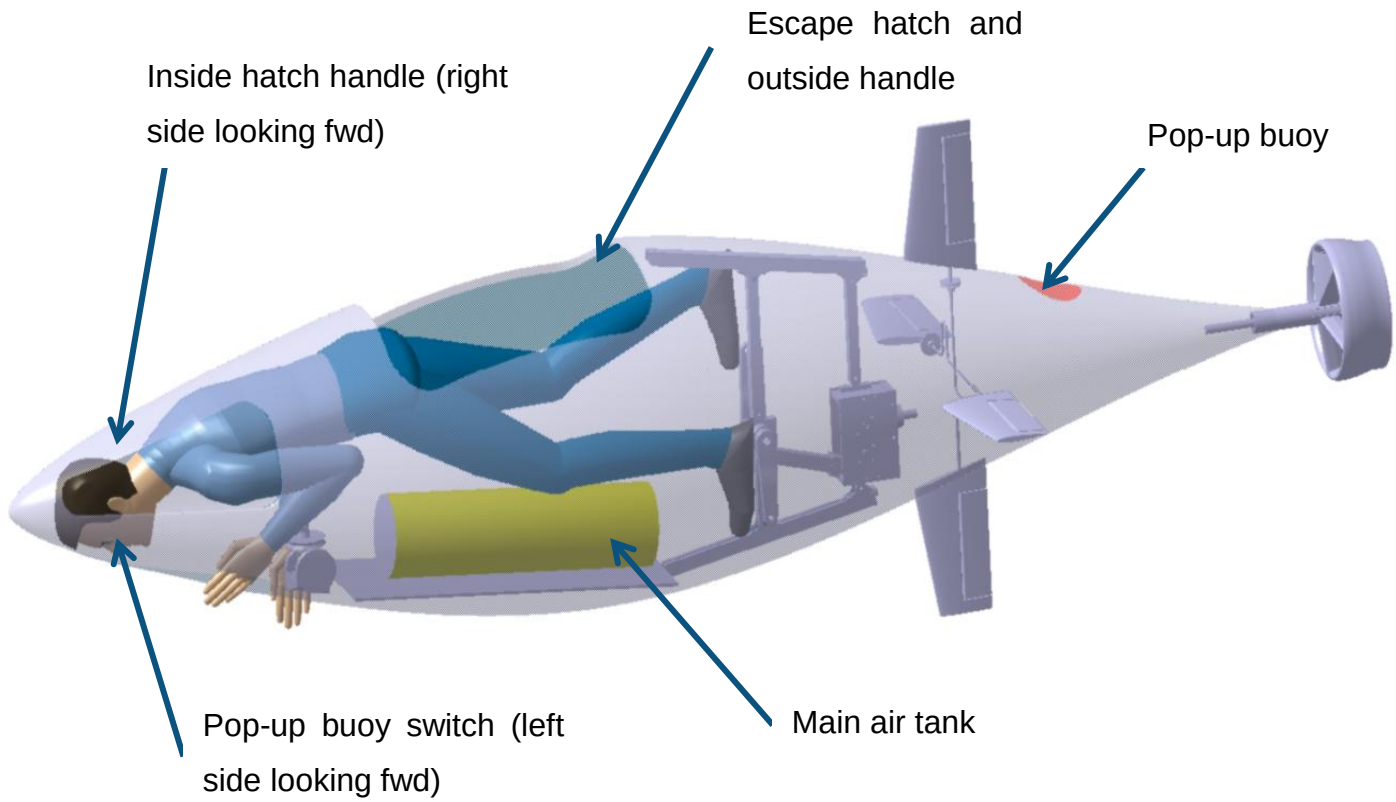

Figure 32 : Safety equipment location

14.2 EMERGENCY POP-UP BUOY

In the event of an emergency situation, a pneumatic system will automatically release a white pop-up buoy. On Archimede VI, this device is actually an integrated small circular part of the hull. Located at the back of the submarine, it is fixed to the hull by to small pneumatic piston related to a dead-man button. When the pilot holds this emergency switch, air pressure from an individual pony bottle is kept in the piston. If the pilot releases the switch, the pressurized circuit is instantly opened, releasing the pressure and retracting the pistons. The switch is

located inside the nose of the submarine. The buoy than detached from the sub and reaches the surface in an instant, signaling help is needed. The buoy is attached to the submarine by a roll of thirty feet of 1/16 thick yellow nylon rope.

14.3 CREW VISIBILITY

Crew visibility has been largely improved for Archimede VI. The crew visibility is assured through the nose of the submarine which is completely made of a plastic sheet, thermoformed through a vacuum thermoforming process, to fit the complex shape of the front of the submarine. This process consists into heating up a plastic sheet, which is then stretched over a mold thanks to a vacuum pressure applied under it.
This design ensures a complete 180° degree vision angle both vertical and lateral directions.

14.4 AIR SUPPLY

Archimede's team worked hard to meet and exceed every safety requirements for the competition. Thus, the primary air supply carried onboard is a standard aluminum scuba diving thank equipped with two regulators, and both depth and pressure gauges. The main air tank is located just under the pilot and is secured by two nylon strap. It is positioned in a way to minimize as possible the roll of the submarine.

The secondary air supply is a small 3L bright yellow pony bottle equipped with its own regulator. It is permanently attached to the pilot's waist.

14.5 STROBE MARKING LIGHT

A standard scuba diving strobe light is fixed on top of the rear end of the submarine. It delivers a bright white light visible from every angle. The strobe is located just forward of the upper fin.

14.6 ESCAPE HATCH

The escape hatch can be opened from the inside and from the outside. Both mechanisms are identified by bright orange paint. Both mechanisms are fully independent to ensure safety in case of a failure. The size of the hatch is 26” (0.66m) long and 22” (0.56m) wide. The location of the hatch allows the rescue divers to easily access the pilot legs in case of an emergency. A nylon strap prevents the hatch from floating away.

14.7 RESTRAIN

No restraining systems are used except for road clipless pedals. The shapes of the submarine provide enough support for the pilot.

15 Sponsorship

Every year, members of Archimede accomplish a tremendous amount of work and manage to deliver a submarine always exceeding the standards set by its predecessor. These operations require large investments and this whole project could not be possible without the precious help of sponsors.

Archimede deploys great efforts in building and maintaining good relations with every company involved in our project whether they are bringing financial help or technical support. In order to offer a maximum visibility for all our sponsors, the team spends many hours in creating different promotional articles and organizing promotional events.

The team would like to take this opportunity to thank its sponsors and supports on this wonderful project.

Table 5: Our sponsors

AEP	
Boston Gear	
CCHP	
Constellation	
Coopoly	
CRE-O-PACK Intl.	
Desjardins	
Ecole Polytechnique de Montreal	
FAIE	

Gestion Férique	
Gurit	
Jb martin	
Marquez Transtech	
Nautican	
Nepteau	
Plasto	
SKF	

16 Conclusion

The different phase of this project has been strategically divided among every members of the team so that every critical components of the submarine would be covered. This way, Archimede VI now has a completely redesign hull. Furthermore, the concept of its fins, propulsion system and steering system have been revisited and upgraded with new technologies and ideas. This report presented detailed explanations of every phase by supporting every engineering decision with calculations and precise analysis using the most recent engineering software.

The team now has great confidence into its vehicle and has high expectations for the next races. Archimede is now looking forward to see its new submarine push the further the performance established by its predecessors.

Team Archimede

APPENDIX A: Detailed analysis on Fins design

The tridimensional computer model allowed the team to perform a finite element analysis on the fin to put its design to the test. To reduce computational time, the analysis was thus only made on the regular fixed part of the fin. The purpose of this analysis was to observe the water flow around the geometry and detect any excessive distortion.

16.1 MESHING THE MODEL

The first step of any finite element analysis is the meshing of the model. This was made using the software *ANSYS Mesh* from *ANSYS Workbench 12.1*. The objective here was not to mesh the solid geometry, but the actual environment around it. The model presented previously in figure 6 was used and modified to obtain an approximation of the environment around the fin just like presented on the following figure 7.

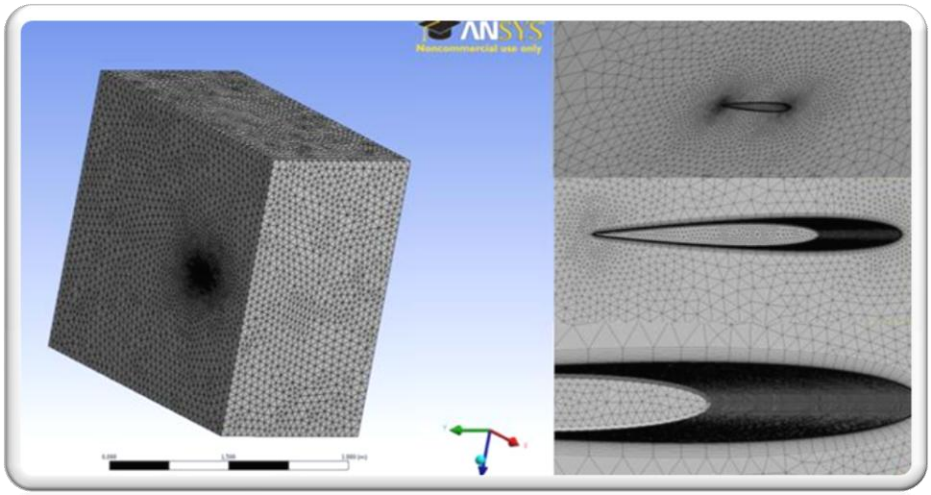

Figure 33 : Meshing used for the finite element analysis

Note how precise is the mesh is around the profile's perimeter. This particularity is to ensure a good reading of the flow near the fin's surface where the boundary layer is formed. Although, it requires considerable computational power and time.

Once the environment meshing is combined with the tridimensional model, as shown in figure 8, the finite element analysis on fluid dynamics can be performed. ANSYS Fluent was used to perform this analysis.

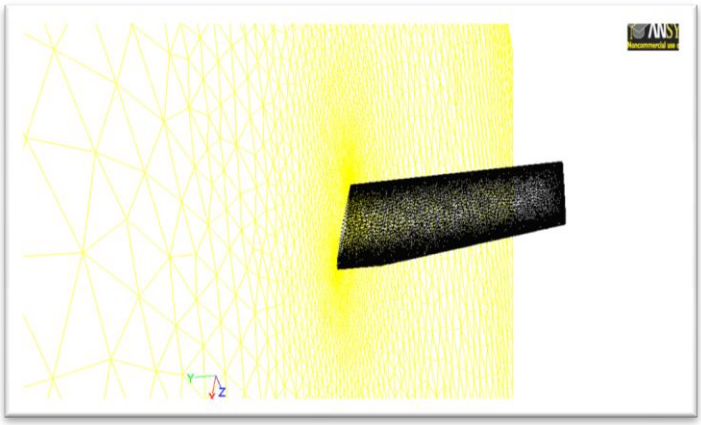

Figure 34 : Complete model meshed in ANSYS

16.2 RESULTS OF ANALYSIS

The software now has every condition and specifications it needs to perform a fluid analysis. Many different types of results can be graphically illustrated once every calculation is completed. The most interesting and revealing results are presented in the following figures.

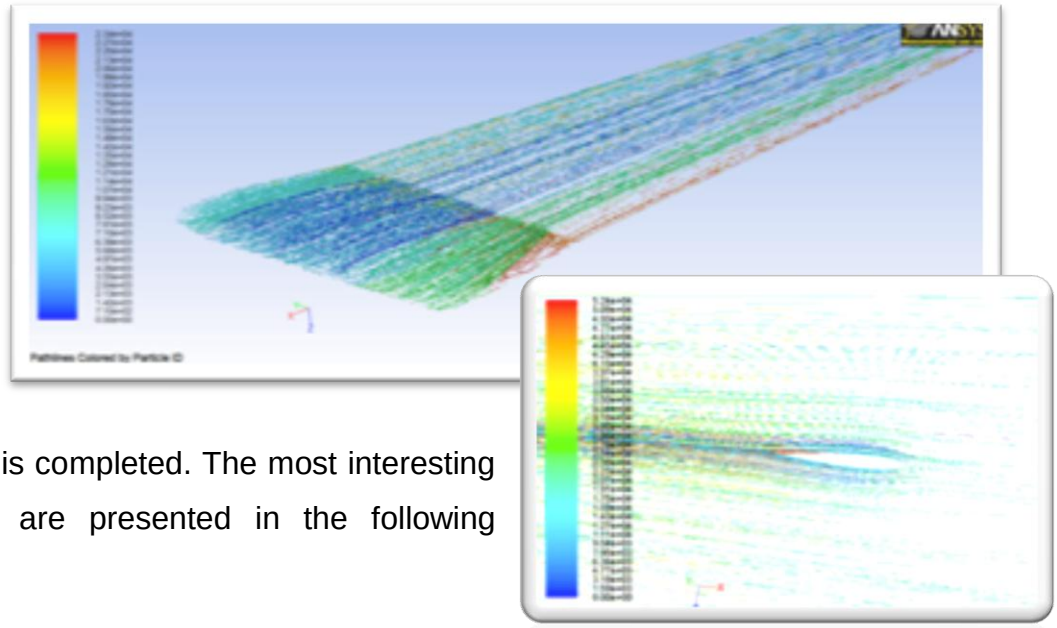

Figure 35 : Pathlines of water flow around the fin

The first results, illustrated above in figure 9 presents, on a general manner, the main pathlines of the water flow around the fin. These lines are definitely regular all the way around the fin and present a clear straight trajectory. Therefore, no major water turbulence is created when the fin is travelling underwater.

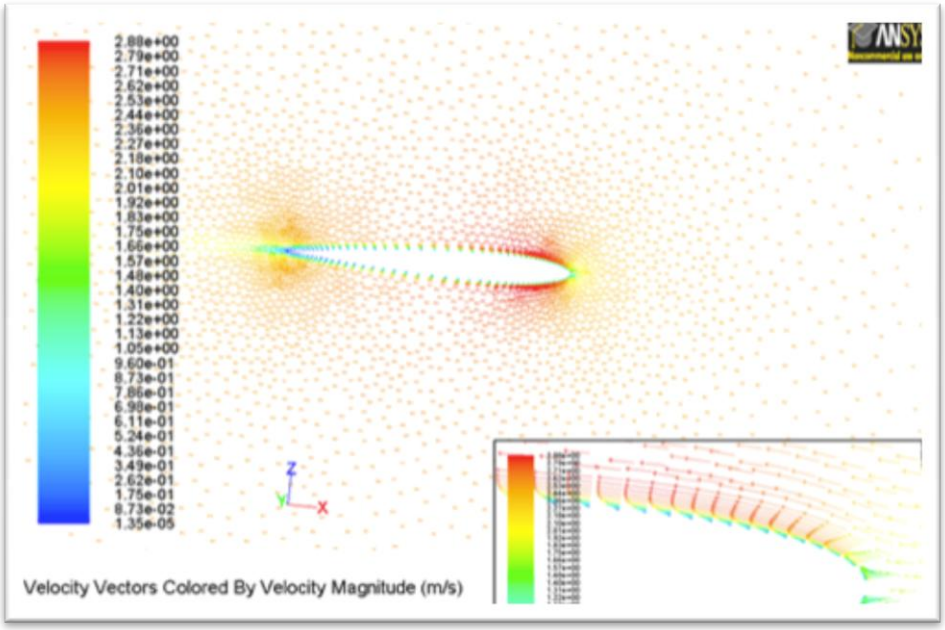

The next illustration presents another very important parameter when it comes to design a fin. In this situation, figure 10 shows the magnitudes of flow velocity around the fin. What we want to make sure, here, is that velocity dissipates well after hitting the fin, but still smoothly follows the outline. The colored scale presents a dark red area right at the front of the fin. This is normal since it is the area of impact with water. Although, following the fin's perimeter, the color rapidly changes to lower colors. That is the behavior we are looking for. Finally, a second area, at the rear end of the fin, presents another concentration of vectors. This is where the water flows from both sides meet and thus it proves that the water flow was gliding along the contour. The picture zoomed on the nose illustrates how well defined is the boundary layer, a thin water layer around the fin where the velocity is almost zero.

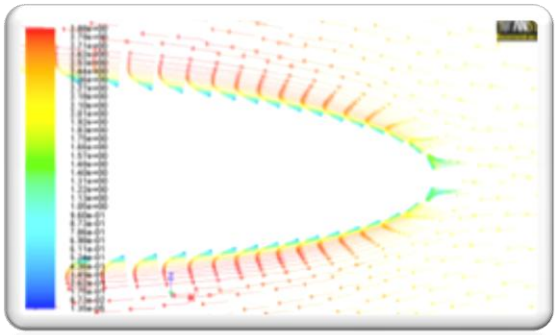

Figure 36 : Velocity vectors of water flow around the fin

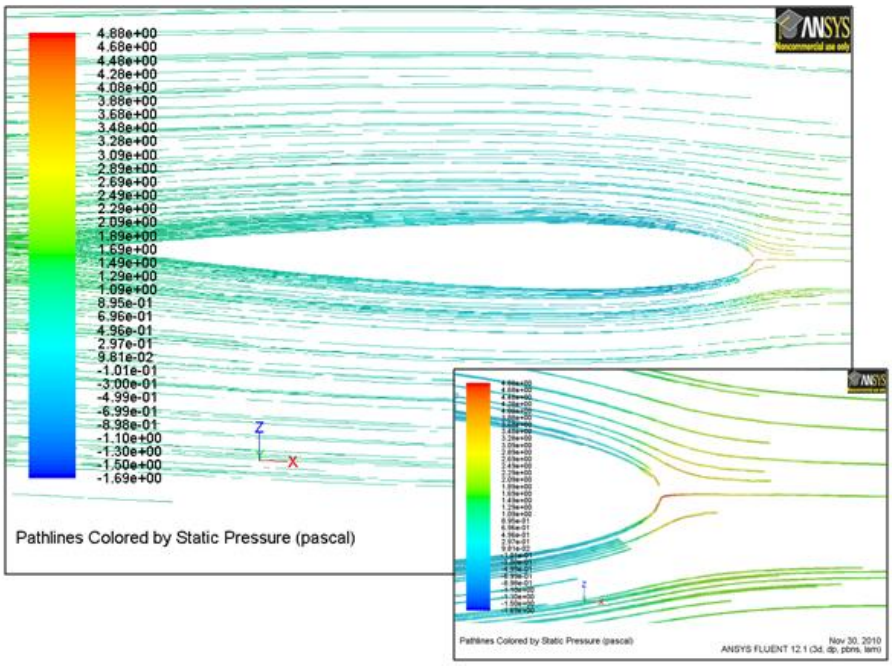

Figure 37 : Pathlines of pressure flow around the fin

Finally, the pictures of figure 11 are showing another great achievement in the design of the fins. This figure shows the pathlines of the pressure flow around the fin. The pressure around an object in a flow is directly linked to its drag. As it is possible to observe, the only area where a significant pressure is created is at the airfoil's front edge. This pressure is absolutely normal. It is created by the fluid's separation on each side of the fin and is inevitable. Note that it does not have a significant influence on the fin's total drag.

Every fluid dynamics analysis presented above proved the efficiency of the design. It is important to remind that these analyses were made for the specific case where the flap is not activated. The results would have been clearly different in such case. When activated, a flap builds considerable distortion behind itself. However, knowing the fact that the submarine is designed to be perfectly neutral in water and should go in straight line with no major help from the directional fins, this simplification is definitely acceptable for the required analysis.

APPENDIX B: Detailed analysis on the transmission system

The analysis of force dissipation in the transmission system was first made on the entire structure. Only the structural elements were modeled. This analysis was used to calculate the reactions at the anchor points and to identify parts requiring further analysis. The figure 17 illustrates the deformations of the structure under the force generated by the pilot when pedaling. The analyses were performed using ANSYS.

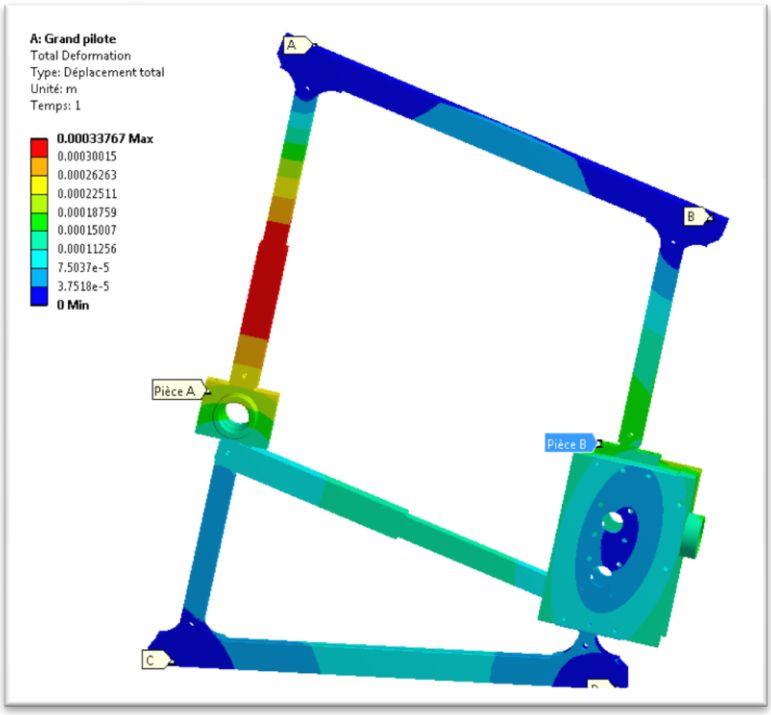

Figure 38 : Deformation of transmission structure under pedaling forces

This analysis determined that two pieces; part A and part B as indicated in figure 17, are under considerable stress. These two parts will thus be analyzed separately using a finer mesh.

The Von Mises stress results are shown in figure 18 for part A and 19 for part B. A convergence analysis was also conducted to verify the validity of these results.

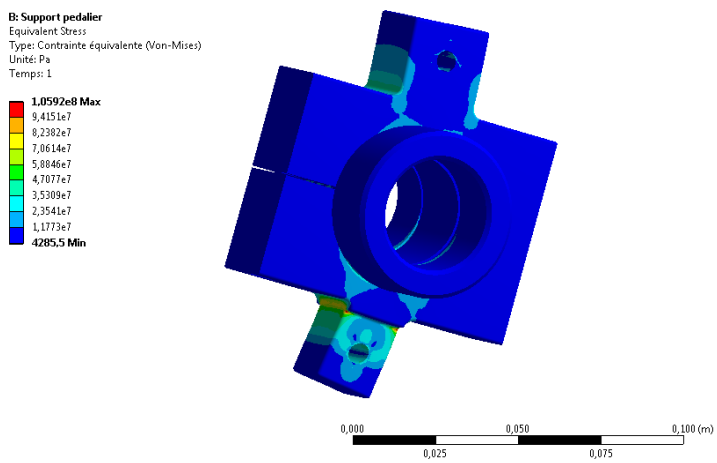

Figure 39 : Stress analysis on Part A

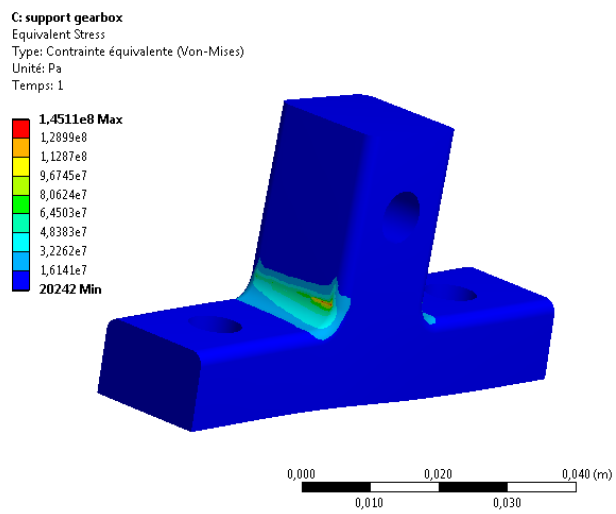

Figure 40 : Stress analysis on Part B

For part A, the fatigue life of this piece was calculated for a life of $1x10^6$ cycles. This represents more than 100 hours of use. A safety factor of 1.76 was obtained against failure by fatigue. As for part B, the fatigue life of this part was also calculated for a life of $1x10^6$ cycles, or over 100 hours of use. This part has a safety factor of 1.28 against failure by fatigue.

Table 6: Fatigue life of sub transmission structure

	Part A	Part B
Design Life (cycles)	10^6	10^6
Safety factor	1,76	1,28